ROBOTICS

Product specification

IRB 4600

Trace back information:
Workspace OmniCore and R19C version a16
Checked in 2019-09-16
Skribenta version 5.3.012

Product specification

IRB 4600-60/2.05
IRB 4600-45/2.05
IRB 4600-40/2.55
IRB 4600-20/2.50

Document ID: 3HAC032885-001

Revision: Z

© Copyright 2009-2019 ABB. All rights reserved.
Specifications subject to change without notice.

The information in this manual is subject to change without notice and should not be construed as a commitment by ABB. ABB assumes no responsibility for any errors that may appear in this manual.

Except as may be expressly stated anywhere in this manual, nothing herein shall be construed as any kind of guarantee or warranty by ABB for losses, damages to persons or property, fitness for a specific purpose or the like.

In no event shall ABB be liable for incidental or consequential damages arising from use of this manual and products described herein.

This manual and parts thereof must not be reproduced or copied without ABB's written permission.

Keep for future reference.

Additional copies of this manual may be obtained from ABB.

Original instructions.

© Copyright 2009-2019 ABB. All rights reserved.
Specifications subject to change without notice.

Table of contents

Overview of this specification 7

1 Description 11

1.1 Structure 11
1.1.1 Introduction to Structure 11
1.1.2 Different robot versions 15
1.2 Standards 19
1.2.1 Applicable standards 19
1.3 Installation 21
1.3.1 Introduction to Installation 21
1.3.2 Operating requirements 22
1.3.3 Mounting the manipulator 23
1.4 Calibration 26
1.4.1 Calibration methods 26
1.4.2 Fine calibration with Calibration Pendulum 29
1.4.3 Absolute Accuracy calibration 30
1.5 Robot load and load diagrams 33
1.5.1 Introduction to Robot load and load diagrams 33
1.5.2 Load diagrams 34
1.5.3 Maximum load and moment of inertia for full and limited axis 5 (centerlinedown) movement 41
1.5.4 Wrist torque 43
1.5.5 Maximum TCP acceleration 44
1.6 Mounting equipment 45
1.6.1 Information about mounting equipment 45
1.7 Maintenance and troubleshooting 53
1.7.1 Introduction to Maintenance and Troubleshooting 53
1.8 Robot motion 54
1.8.1 Introduction to Robot Motion 54
1.8.2 Performance according to ISO 9283 56
1.8.3 Velocity 57
1.8.4 Robot stopping distances and times 58
1.9 Cooling fan for axis 1-2 motor 59
1.10 Customer connections 60
1.10.1 Introduction to Customer connections 60

2 Specification of variants and options 63

2.1 Introduction to variants and options 63
2.2 Manipulator 64
2.3 Floor cables 69
2.4 Process 70
2.5 User documentation 71

3 Accessories 73

3.1 Introduction to accessories 73

Index 75

© Copyright 2009-2019 ABB. All rights reserved.

This page is intentionally left blank

Overview of this specification

About this product specification

It describes the performance of the manipulator or a complete family of manipulators in terms of:

- The structure and dimensions prints
- The fulfillment of standards, safety and operating requirements
- The load diagrams, mounting or extra equipment, the motion and the robot reach
- The specification of variants and options available

Usage

Product specifications are used to find data and performance about the product, for example to decide which product to buy. How to handle the product is described in the product manual.

Users

This manual is intended for:

- Product managers and personnel
- Sales and Marketing personnel
- Order and Customer Service personnel

References

Reference	Document ID
Product specification - Controller IRC5 IRC5 with main computer DSQC1000.	*3HAC047400-001*
Product specification - Controller software IRC5 IRC5 with main computer DSQC1000 and RobotWare 5.6x.	*3HAC050945-001*
Product specification - Controller software IRC5 IRC5 with main computer DSQC1000 and RobotWare 6.	*3HAC050945-001*
Product manual - IRB 4600	*3HAC033453-001*
Product specification - Robot user documentation, IRC5 with RobotWare 6	*3HAC052355-001*

Revisions

Revision	Description
-	First edition
A	- Updated/Corrected Load diagram
B	- Corrected working range floor mounted
C	- General updates and corrections
D	- Corrected chapter: Mounting and Bushings
E	- Foundry Plus 2

Continues on next page

© Copyright 2009-2019 ABB. All rights reserved.

Revision	Description
F	- Foundry Plus 2 update
G	- Text for Standards updated, minor changes
H	- Foundry Prime 2 added + minor corrections
J	• Table for ambient temperature adjusted • Value added to drawing, Mounting surface and bushings • Minor corrections
K	• Machinery directive updated
L	• General updates and minor corrections • Foundry Prime 2 added
M	• General updates and minor corrections
N	• Text for ISO test adjusted • Robot stopping distances and times for category 0 and category 1 stops are moved to a separate document, *Product specification - Robot stopping distances according to ISO 10218-1*
P	• Text for Foundry Plus updated. • General updates and minor corrections
Q	• Information about Foundry Prime 2 that was missing in revision P is added
R	• Description option 908-1 added. • Tilting around X-axis added
S	• Option 224-2 Inverted mounting removed. • Number of M16 threaded holes in base changed.
T	• Information regarding limitations for wall mounted manipulator added. • Axis Calibration method added
U	Published in release R17.1. The following updates are done in this revision: • Description of Axis Calibration method revised. • Wall mounted removed. • Restriction of load diagram added.
V	Published in release R17.2. The following updates are done in this revision: • Updated list of applicable standards. • TCP acceleration information added
W	Published in release R18.1. The following updates are done in this revision: • Minor changes.
X	Published in release R18.2. The following updates are done in this revision: • Customer Ethernet connection graphic added. • Manipulator axes rotation direction figure updated.
Y	Published in release 19B. The following updates are done in this revision: • Changed the designation of air hose, *Customer connections on page 60*. • Updated information about *Absolute Accuracy*.

Continues on next page

© Copyright 2009-2019 ABB. All rights reserved.

Revision	Description
Z	Published in release 19C. The following updates are done in this revision: • Note added about need to calibrate if the robot is other than floor mounted. See *Calibration methods on page 26*.

© Copyright 2009-2019 ABB. All rights reserved.

This page is intentionally left blank

1 Description

1.1 Structure

1.1.1 Introduction to Structure

Robot family

The IRB 4600 series is ABB Robotics pioneer of the new sharp generation with enhanced and new capabilities. The design has been optimized to make it superior for the targeted applications. The IRB 4600 will focus on further expansion in material handling, machine tending, laser- and water jet cutting, dispensing, measuring, assembly and welding applications.

Operating system

The robot is equipped with the IRC5 controller and robot control software, RobotWare. RobotWare supports every aspect of the robot system, such as motion control, development and execution of application programs, communication etc. See Product specification - Controller IRC5 with FlexPendant.

Safety

Safety standards valid for complete robot, manipulator and controller.

Additional functionality

For additional functionality, the robot can be equipped with optional software for application support - for example gluing and welding, communication features - network communication - and advanced functions such as multitasking, sensor control etc. For a complete description on optional software, see the Product specification - Controller software IRC5.

Protection type Foundry Plus 2

Robots with the option Foundry Plus 2 are designed for harsh environments where the robot is exposed to sprays of coolants, lubricants and metal spits that are typical for die casting applications or other similar applications.

Typical applications are spraying insertion and part extraction of die-casting machines, handling in sand casting and gravity casting, etc. (Please refer to Foundry Prime robots for washing applications or other similar applications). Special care must be taken in regard to operational and maintenance requirements for applications in foundry are as well as in other applications areas. Please contact ABB Robotics Sales organization if in doubt regarding specific application feasibility for the Foundry Plus 2 protected robot.

The robot is painted with two-component epoxy on top of a primer for corrosion protection. To further improve the corrosion protection additional rust preventive are applied to exposed and crucial areas, e.g. has the tool flange a special preventive coating. Although, continuous splashing of water or other similar rust formation fluids may cause rust attach on the robots unpainted areas, joints, or other unprotected surfaces. Under these circumstances it is recommended to add

Continues on next page

© Copyright 2009-2019 ABB. All rights reserved.

rust inhibitor to the fluid or take other measures to prevent potential rust formation on the mentioned.

The entire robot is IP67 compliant according to IEC 60529 - from base to wrist, which means that the electrical compartments are sealed against water and solid contaminants. Among other things all sensitive parts are better protected than the standard offer.

Selected Foundry Plus 2 features:

- Improved sealing to prevent penetration into cavities to secure IP67
- Additional protection of cabling and electronics
- Special covers that protect cavities
- Well-proven connectors
- Nickel coated tool flange
- Rust preventives on screws, washers and unpainted/machined surfaces
- Extended service and maintenance program

The Foundry Plus 2 robot can be cleaned with appropriate washing equipment according to the robot product manual. Appropriate cleaning and maintenance is required to maintain the protection, for example can rust preventive be washed off with wrong cleaning method.

Available robot versions

The option Foundry Plus 2 might not be available for all robot versions.

See *Specification of variants and options on page 63* for robot versions and other options not selectable together with Foundry Plus 2.

Protection type Foundry Prime 2

Robots with the option Foundry Prime are designed for water jet cleaning of casts and machined parts, and similar very harsh, but proven robotic application environments. Applicability in other applications cannot be guaranteed without prior testing, previous experience or professional judgment by ABB. Please contact ABB Robotics Sales organization if in doubt regarding specific application feasibility.

The manipulator can withstand surrounding solvent based detergents which must be approved by ABB. In addition, the manipulator can withstand indirect spray from jet pressure (max. 600 bar) and 100% humidity (gaseous mixture only).

The manipulator can work in an environment with a cleaning bath temperature < 60° C, typically used in a washing application with moderate robot speed. Surrounding temperature can not be higher than specified for the option.

If fluids that may cause rust formation, for example water, are continuous splashing the robot or are used in the vicinity of the robot it is strongly recommended to add rust inhibitor to the fluid or take other measures to prevent potential rust formation on the robots unpainted areas, joints, or other unprotected, surfaces.

The robot is protected by well-proven sealings for gears and bearings, pressurized motors and electronic compartment, and detergent resistant painting system in three layers (two layer epoxy paint under a protective layer of clear coat). Non painted surfaces has rust preventive coating (Mercasol), and motors (IRB 4400) are sealed with a sealing compound.

Continues on next page

© Copyright 2009-2019 ABB. All rights reserved.

As the robot is designed for very harsh environments, an extended service and maintenance program is required. Special care must be taken when replacing parts or performing other maintenance and service that breaks the paint surface as the paint surface act as a protective barrier. For detailed information of the maintenance program, see chapter Maintenance in the product manual. It is highly recommended to sign a Service Agreement with ABB due to difficult and severe environmental conditions.

The Foundry Prime robot can be cleaned with appropriate washing equipment according to the product manual. Appropriate cleaning and maintenance are required to maintain the Foundry Prime protection, for example can the rust preventive be washed off with wrong cleaning method.

Detergents

General detergent requirements:

- Washing detergent with max pH <9.0, if not stated otherwise
- Washing detergent must be approved by ABB
- ABB maintain a list of approved cleaners/detergents, see 3HAC037554-001
- The washing detergent must:
  - be cleaned continuously
  - contain rust inhibitor
  - be checked regulalry for pH value and concentration
  - not use other additives than water without prior testing
- The user must follow the recommendations regarding detergent concentration anf pH value
- No other additive than water is guaranteed without prior testing or consultation with ABB. Other additives than water may have a harmful effect on the life time of the robot and its components.

Please contact your local ABB organization for an updated list of approved washing detergents.

Available robot versions

The option Foundry Prime might not be available for all robot versions.

See *Specification of variants and options on page 63* for robot versions and other options not selectable together with Foundry Prime.

Continues on next page

© Copyright 2009-2019 ABB. All rights reserved.

Manipulator axes

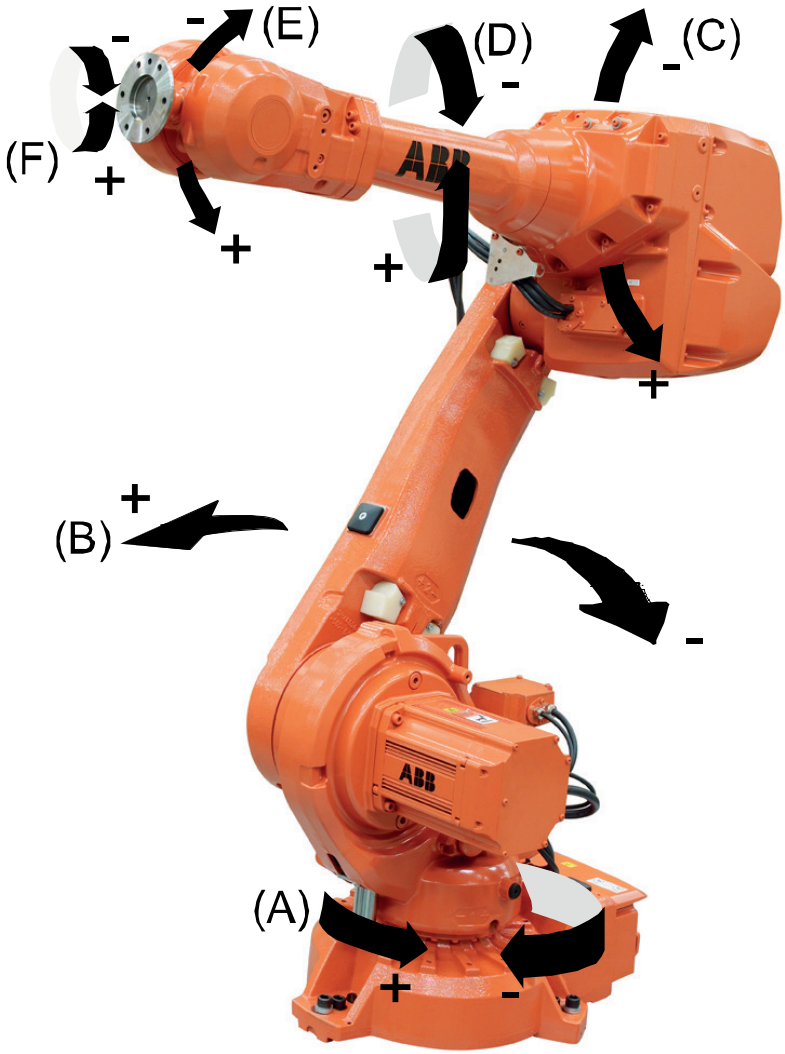

xx1800001381

Pos	Description	Pos	Description
A	Axis 1	B	Axis 2
C	Axis 3	D	Axis 4
E	Axis 5	F	Axis 6

© Copyright 2009-2019 ABB. All rights reserved.

1.1.2 Different robot versions

General

The IRB 4600 is available in four versions and all versions can be floor mounted, inverted or tilted (up to 15 degrees around the Y-axis or X-axis).

Robot type	Handling capacity (kg)	Reach (m)
IRB 4600	60 kg	2.05 m
IRB 4600	45 kg	2.05 m
IRB 4600	40 kg	2.55 m
IRB 4600	20 kg	2.50 m

Manipulator weight

Robot type	Weight
IRB 4600-60/2.05	425 kg
IRB 4600-45/2.05	425 kg
IRB 4600-40/2.55	435 kg
IBB 4600-20/2.50	412 kg

Other technical data

Data	Description	Note
Airborne noise level	The sound pressure level outside the working space	<72 dB (A) Leq (acc. to Machinery directive 2006/42/EG)

Power consumption at max load

Type of Movement	IRB 4600 (all variants)			
	-60/2.05	-45/2.05	-40/2.55	-20/2.50
ISO Cube Max. velocity	1.53 kW	1.43 kW	1.62 kW	1.50 kW

Robot in calibration position	IRB 4600			
	-60/2.05	-45/2.05	-40/2.55	-20/2.50
Brakes engaged	0.24 kW	0.24 kW	0.24 kW	0.24 kW
Brakes disengaged	0.66 kW	0.60 kW	0.65 kW	0.52 kW

Continues on next page

© Copyright 2009-2019 ABB. All rights reserved.

1.1.2 Different robot versions
Continued

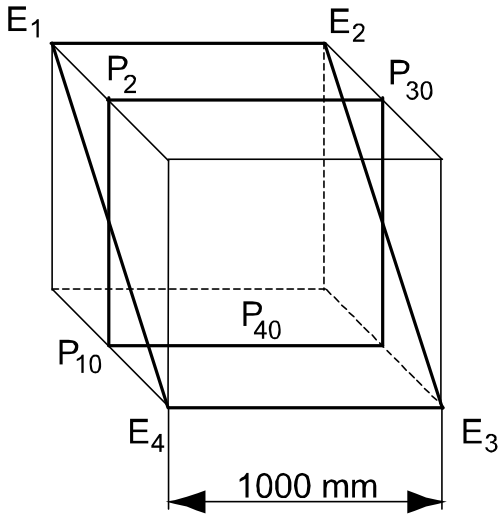

xx0800000420

Continues on next page

© Copyright 2009-2019 ABB. All rights reserved.

Dimensions IRB 4600-60(45)/2.05 and IRB 4600-40/2.55

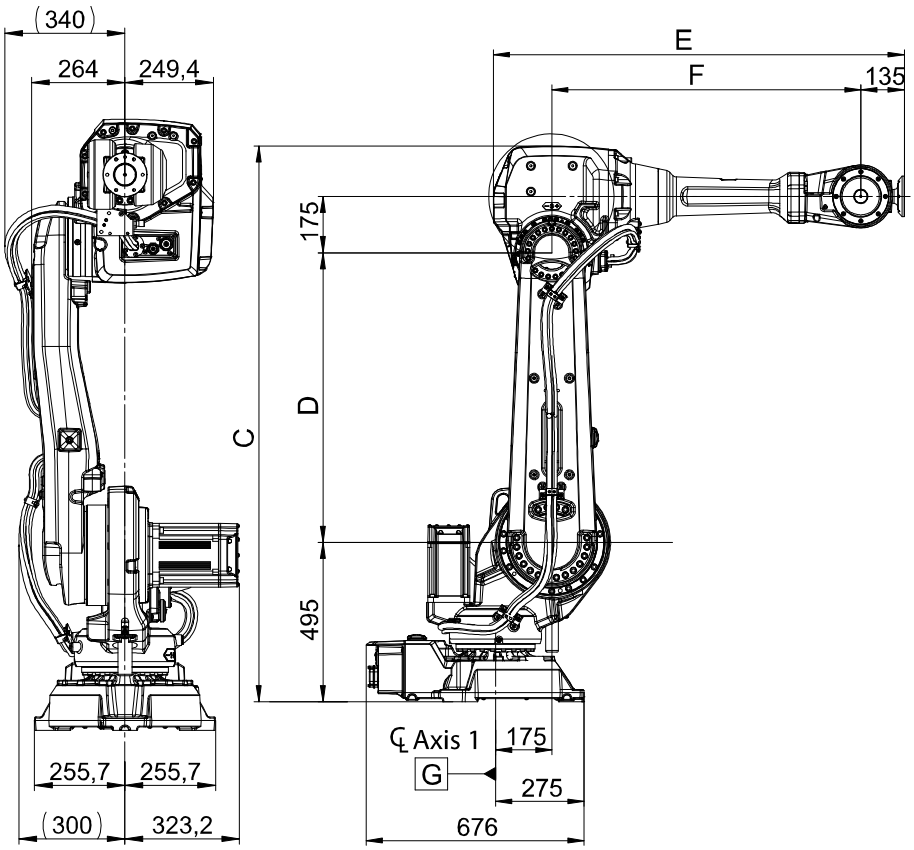

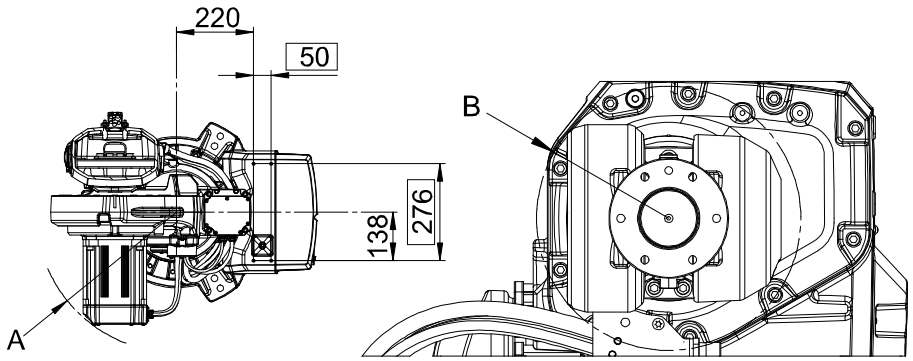

xx0800000430

Pos	Description
A	R 400 Minimum turning radius of axis 1
B	R 138 Minimum turning radius of axis 4

Variant	C	D	E	F
IRB 4600-60/2.05	1727 mm	900 mm	1276 mm	960 mm
IRB 4600-45/2.05	1727 mm	900 mm	1276 mm	960 mm
IRB 4600-40/2.55	1922 mm	1095 mm	1586 mm	1270 mm

Continues on next page

© Copyright 2009-2019 ABB. All rights reserved.

Dimensions IRB 4600-20/2.50

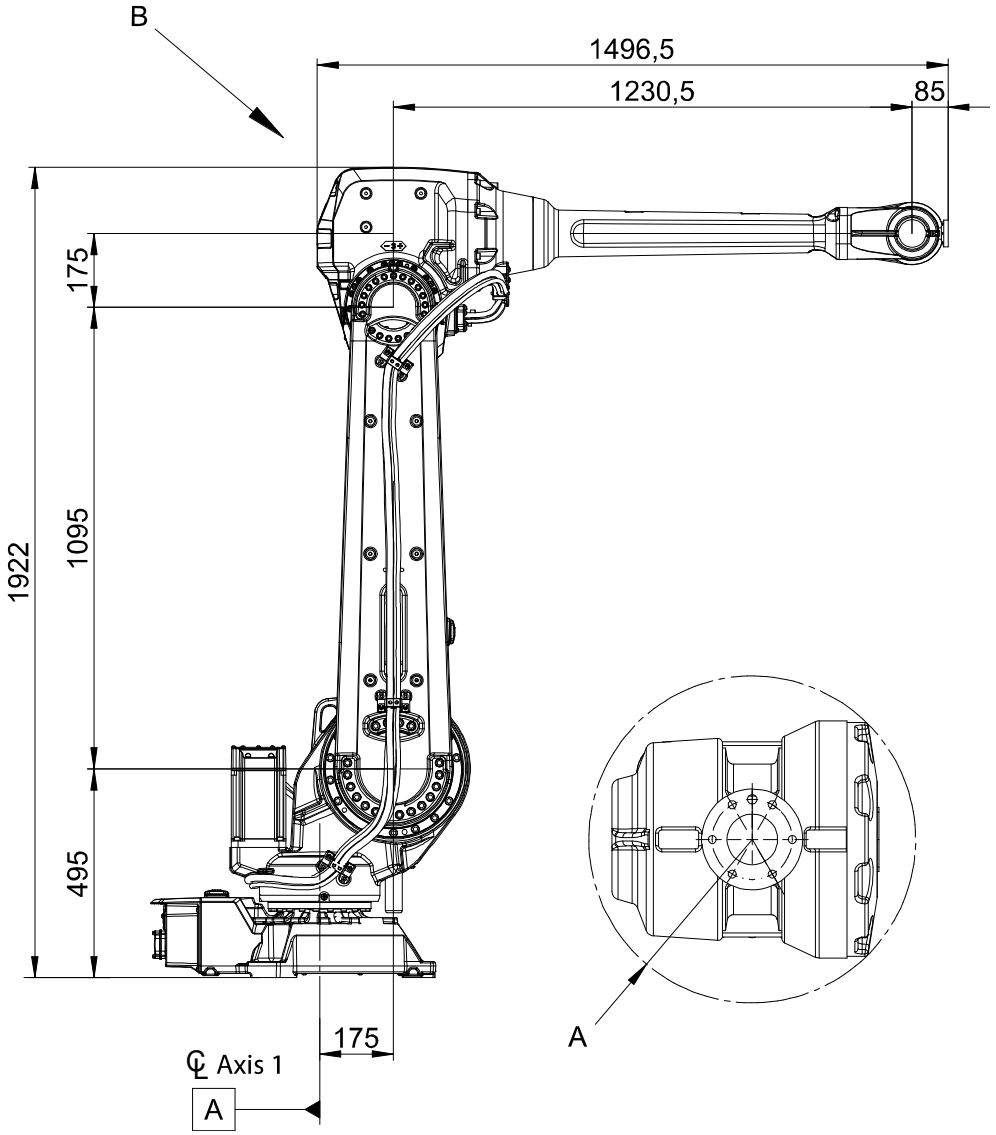

xx0800000428

Pos	Description
A	R 98 Minimum turning radius of axis 4
B	For all other dimensions see Figure 3

© Copyright 2009-2019 ABB. All rights reserved.

1.2 Standards

1.2.1 Applicable standards

Note

The listed standards are valid at the time of the release of this document. Phased out or replaced standards are removed from the list when needed.

Standards, EN ISO

The product is designed in accordance with the requirements of:

Standard	Description
EN ISO 12100:2010	Safety of machinery - General principles for design - Risk assessment and risk reduction
EN ISO 13849-1:2015	Safety of machinery, safety related parts of control systems - Part 1: General principles for design
EN ISO 13850:2015	Safety of machinery - Emergency stop - Principles for design
EN ISO 10218-1:2011	Robots for industrial environments - Safety requirements -Part 1 Robot
ISO 9787:2013	Robots and robotic devices -- Coordinate systems and motion nomenclatures
ISO 9283:1998	Manipulating industrial robots, performance criteria, and related test methods
EN ISO 14644-1:2015 [i]	Classification of air cleanliness
EN ISO 13732-1:2008	Ergonomics of the thermal environment - Part 1
EN 61000-6-4:2007 + A1:2011 IEC 61000-6-4:2006 + A1:2010 (option 129-1)	EMC, Generic emission
EN 61000-6-2:2005 IEC 61000-6-2:2005	EMC, Generic immunity
EN IEC 60974-1:2012 [ii]	Arc welding equipment - Part 1: Welding power sources
EN IEC 60974-10:2014 [ii]	Arc welding equipment - Part 10: EMC requirements
EN IEC 60204-1:2006	Safety of machinery - Electrical equipment of machines - Part 1 General requirements
IEC 60529:1989 + A2:2013	Degrees of protection provided by enclosures (IP code)

i Only robots with protection Clean Room.
ii Only valid for arc welding robots. Replaces EN IEC 61000-6-4 for arc welding robots.

European standards

Standard	Description
EN 614-1:2006 + A1:2009	Safety of machinery - Ergonomic design principles - Part 1: Terminology and general principles

Continues on next page

© Copyright 2009-2019 ABB. All rights reserved.

1.2.1 Applicable standards
Continued

Standard	Description
EN 574:1996 + A1:2008	Safety of machinery - Two-hand control devices - Functional aspects - Principles for design

Other standards

Standard	Description
ANSI/RIA R15.06	Safety requirements for industrial robots and robot systems
ANSI/UL 1740	Safety standard for robots and robotic equipment
CAN/CSA Z 434-14	Industrial robots and robot Systems - General safety requirements

© Copyright 2009-2019 ABB. All rights reserved.

1.3 Installation

1.3.1 Introduction to Installation

General

The IRB 4600 is available in four versions and all versions can be floor mounted, inverted or tilted (up to 15 degrees around the Y-axis or X-axis), for more details see *Product manual - IRB 4600* (also valid for inverted robot) or inverted mounting. Depending on the robot version, an end effector with max. weight of 20 or 60 kg including payload, can be mounted on the tool flange (axis 6). See *Load diagrams on page 34*.

Extra loads

Extra loads, which are included in the load diagrams, can be mounted on the upper arm. An extra load of 35 kg can also be mounted on the frame of axis 1. See *Information about mounting equipment on page 45*

Working range limitations

The working range of axis 1 can be limited by mechanical stops as option. Electronic Position Switches can also be used on all axes for position indication of the manipulator.

© Copyright 2009-2019 ABB. All rights reserved.

1.3.2 Operating requirements

Protection standards

Standard IP67 and Foundry Plus IP67.

Explosive environments

The robot must not be located or operated in an explosive environment.

Ambient temperature

Description	Standard/Option	Temperature
Manipulator during operation	Standard	+ 5°C [a] (41°F) to + 45°C (113°F)
For the controller	Standard/Option	See Product specification - Controller IRC5 with FlexPendant
Complete robot during transportation and storage	Standard	- 25°C (- 13°F) to + 55°C (131°F)
For short periods (not exceeding 24 hours)	Standard	up to + 70°C (158°F)

a) At low environmental temperature < 10° C is, as with any other machine, a warm-up phase recommended to be run with the robot. Otherwise there is a risk that the robot stops or run with lower performance due to temperature dependent oil- and grease viscosity.

Relative humidity

Description	Relative humidly
Complete robot during operation, transportation and storage	Max. 95% at constant temperature

© Copyright 2009-2019 ABB. All rights reserved.

1.3.3 Mounting the manipulator

Maximum load

Maximum load in relation to the base coordinate system

Floor Mounted

Force	Endurance load (in operation)	Max. load (emergency stop)
Force xy	±3940 N	±7790 N
Force z	4350 ±2460 N	4350 ±6360 N
Torque xy	±6850 Nm	±14090 Nm
Torque z	±1610 Nm	±2960 Nm

Suspended

Force	Endurance load (in operation)	Max. load (emergency stop)
Force xy	±3940N	±7790 N
Force z	-4350 ±2460N	-4350 ±6360 N
Torque xy	±6850 Nm	±14090 Nm
Torque z	±1610 Nm	±2960 Nm

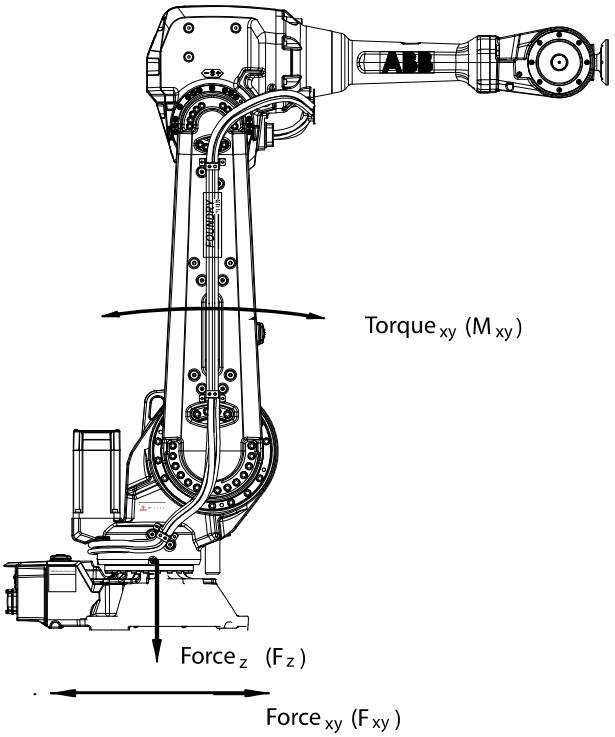

xx0800000435

Continues on next page

© Copyright 2009-2019 ABB. All rights reserved.

1.3.3 Mounting the manipulator
Continued

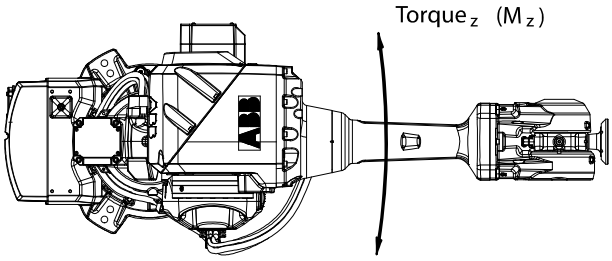

xx0800000436

Note regarding M_{xy} and F_{xy}

The bending torque (M_{xy}) can occur in any direction in the XY-plane of the base coordinate system.The same applies to the transverse force (F_{xy}).

Fastening holes robot base

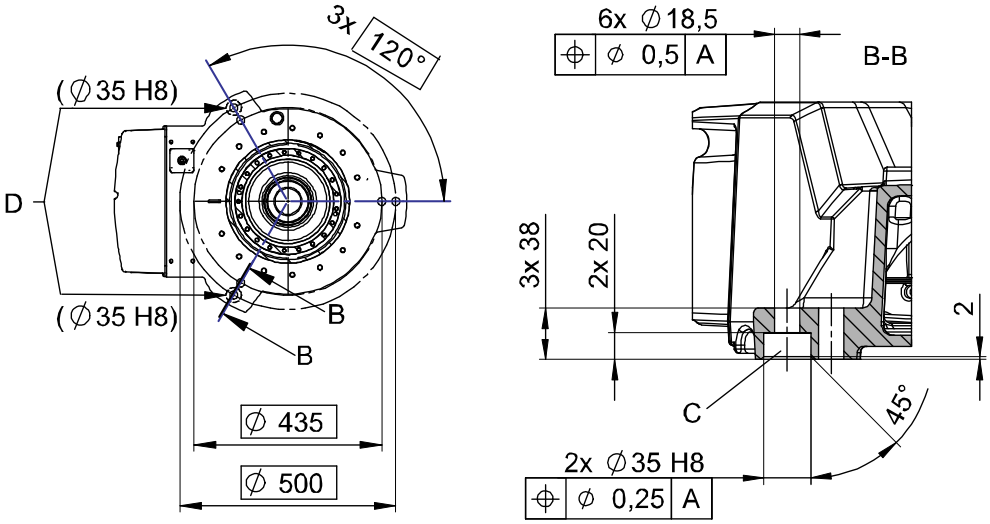

xx0800000271

C	Hole for guide sleeve
D	Rear bolt holes

Attachment bolts, specification

The table below specifies required bolts and washers for securing the robot at installation site.

Securing parts/Facts	Dimension	Note
Securing screws, oiled	M16 x 60 (installation directly on foundation) M16 x 70/80 (installation on foundation or base plate, using guide bushings) Quality 8.8	6 pcs 200 Nm
Washers	17 x 30 x 3	6 pcs

Continues on next page

© Copyright 2009-2019 ABB. All rights reserved.

Securing parts/Facts	Dimension	Note
Guide sleeves		Article number: 21510024-169, 2 pcs. Added to the rear bolt holes, to allow the same robot to be re-mounted without program adjustments. 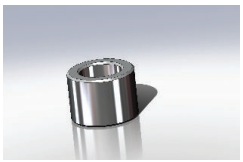 xx1200000885
Level surface requirements	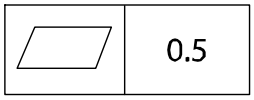 xx0300000251	

Note

For AbsAcc performance, the chosen guide holes according to Figure above are recommended

Mounting surface and bushings

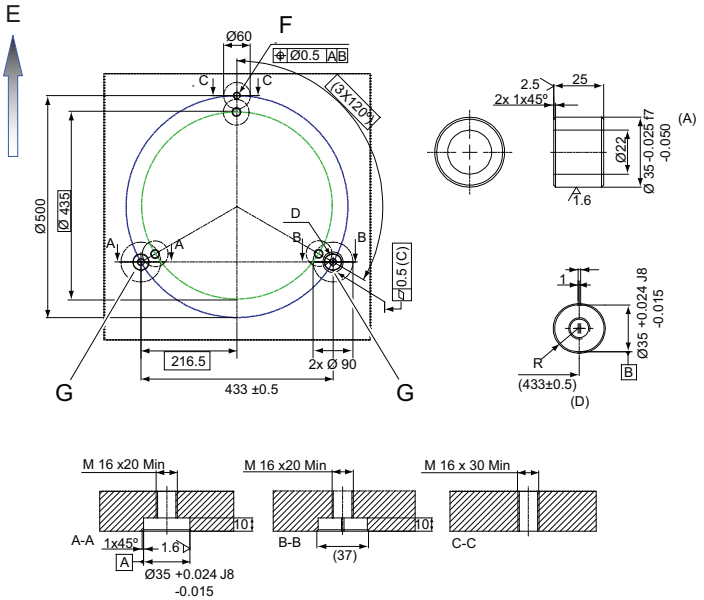

xx0900000392

(C)	3x common zone
E	Position of the front of the robot
F	4xM16 depth 30, minimum
G	Guide bushing (2 pcs)

© Copyright 2009-2019 ABB. All rights reserved.

1.4 Calibration

1.4.1 Calibration methods

Overview

This section specifies the different types of calibration and the calibration methods that are supplied by ABB.

The original calibration data delivered with the robot is generated when the robot is floor mounted. If the robot is not floor mounted, then the robot accuracy could be affected. The robot needs to be calibrated after it is mounted.

More information is available in the product manual.

Types of calibration

Type of calibration	Description	Calibration method
Standard calibration	The calibrated robot is positioned at calibration position. Standard calibration data is found on the SMB (serial measurement board) or EIB in the robot. For robots with RobotWare 5.04 or older, the calibration data is delivered in a file, calib.cfg, supplied with the robot at delivery. The file identifies the correct resolver/motor position corresponding to the robot home position.	Axis Calibration or Calibration Pendulum [i]

Continues on next page

© Copyright 2009-2019 ABB. All rights reserved.

Type of calibration	Description	Calibration method
Absolute accuracy calibration (optional)	Based on standard calibration, and besides positioning the robot at synchronization position, the Absolute accuracy calibration also compensates for: • Mechanical tolerances in the robot structure • Deflection due to load Absolute accuracy calibration focuses on positioning accuracy in the Cartesian coordinate system for the robot. Absolute accuracy calibration data is found on the SMB (serial measurement board) in the robot. For robots with RobotWare 5.05 or older, the absolute accuracy calibration data is delivered in a file, absacc.cfg, supplied with the robot at delivery. The file replaces the calib.cfg file and identifies motor positions as well as absolute accuracy compensation parameters. A robot calibrated with Absolute accuracy has a sticker next to the identification plate of the robot. To regain 100% Absolute accuracy performance, the robot must be recalibrated for absolute accuracy after repair or maintenance that affects the mechanical structure. xx0400001197	CalibWare

i The robot is calibrated by either Calibration Pendulum or Axis Calibration at factory. Always use the same calibration method as used at the factory.

Information about valid calibration method is found on the calibration label or in the calibration menu on the FlexPendant.

If no data is found related to standard calibration, Calibration Pendulum is used as default.

Brief description of calibration methods

Calibration Pendulum method

Calibration Pendulum is a standard calibration method for calibration of all ABB robots (except IRB 6400R, IRB 640, IRB 1400H, and IRB 4400S).

Two different routines are available for the Calibration Pendulum method:

- Calibration Pendulum II
- Reference calibration

The calibration equipment for Calibration Pendulum is delivered as a complete toolkit, including the *Operating manual - Calibration Pendulum*, which describes the method and the different routines further.

Axis Calibration method

Axis Calibration is a standard calibration method for calibration of IRB 4600 and is the most accurate method for the standard calibration. It is the recommended method in order to achieve proper performance.

Continues on next page

© Copyright 2009-2019 ABB. All rights reserved.

The following routines are available for the Axis Calibration method:

- Fine calibration
- Update revolution counters
- Reference calibration

The calibration equipment for Axis Calibration is delivered as a toolkit.

The actual instructions of how to perform the calibration procedure and what to do at each step is given on the FlexPendant. You will be guided through the calibration procedure, step by step.

CalibWare - Absolute Accuracy calibration

The CalibWare tool guides through the calibration process and calculates new compensation parameters. This is further detailed in the *Application manual - CalibWare Field*.

If a service operation is done to a robot with the option Absolute Accuracy, a new absolute accuracy calibration is required in order to establish full performance. For most cases after replacements that do not include taking apart the robot structure, standard calibration is sufficient.

© Copyright 2009-2019 ABB. All rights reserved.

1.4.2 Fine calibration with Calibration Pendulum

Overview

Fine calibration is made using the Calibration Pendulum, see *Operating manual - Calibration Pendulum*.

The following figure shows all axes in zero position.

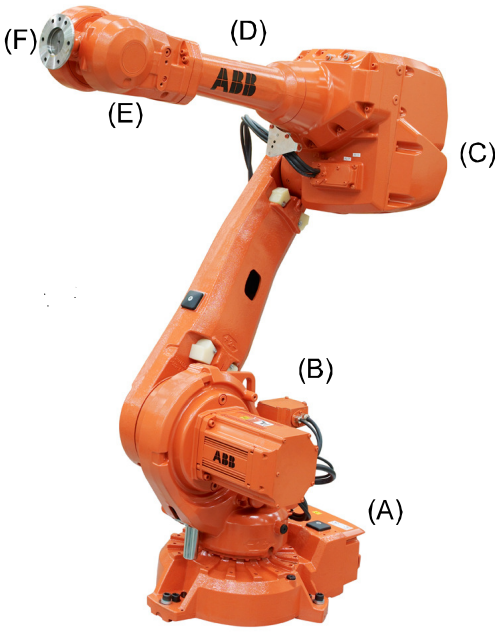

xx0800000437

Pos	Description	Pos	Description
A	Axis 1	B	Axis 2
C	Axis 3	D	Axis 4
E	Axis 5	F	Axis 6

Calibration	Position
Calibration of all axes	All axes are in zero position
Calibration of axis 1 and 2	Axis 1 and 2 in zero position Axis 3 to 6 in any position
Calibration of axis 1	Axis 1 in zero position Axis 2 to 6 in any position

© Copyright 2009-2019 ABB. All rights reserved.

1.4.3 Absolute Accuracy calibration

Purpose

Absolute Accuracy is a calibration concept that improves TCP accuracy. The difference between an ideal robot and a real robot can be several millimeters, resulting from mechanical tolerances and deflection in the robot structure. Absolute Accuracy compensates for these differences.

Here are some examples of when this accuracy is important:

- Exchangeability of robots
- Offline programming with non or minimum touch-up
- Online programming with accurate movement and reorientation of tool
- Accurate cell alignment for MultiMove coordinated motion
- Programming with accurate offset movement in relation to eg. vision system or offset programming
- Re-use of programs between applications

The option Absolute Accuracy is integrated in the controller algorithms and does not need external equipment or calculation.

Note

The performance data is applicable to the corresponding RobotWare version of the individual robot.

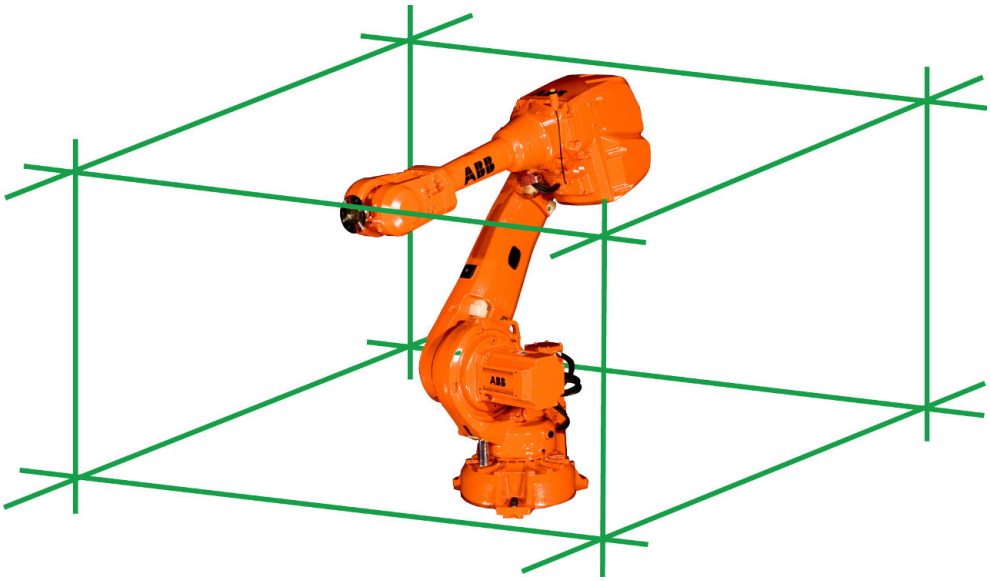

xx0900000073

What is included

Every Absolute Accuracy robot is delivered with:

- compensation parameters saved on the robot's serial measurement board
- a birth certificate representing the Absolute Accuracy measurement protocol for the calibration and verification sequence.

Continues on next page

© Copyright 2009-2019 ABB. All rights reserved.

A robot with Absolute Accuracy calibration is marked on the manipulator.

Absolute Accuracy supports both floor mounted and inverted installations. The compensation parameters differ depending on if the robot is floor mounted or inverted.

When is Absolute Accuracy being used

Absolute Accuracy works on a robot target in Cartesian coordinates, not on the individual joints. Therefore, joint based movements (e.g. `MoveAbsJ`) will not be affected.

If the robot is inverted, the Absolute Accuracy calibration must be performed when the robot is inverted.

Absolute Accuracy active

Absolute Accuracy will be active in the following cases:

- Any motion function based on robtargets (e.g. `MoveL`) and ModPos on robtargets
- Reorientation jogging
- Linear jogging
- Tool definition (4, 5, 6 point tool definition, room fixed TCP, stationary tool)
- Work object definition

Absolute Accuracy not active

The following are examples of when Absolute Accuracy is not active:

- Any motion function based on a jointtarget (`MoveAbsJ`)
- Independent joint
- Joint based jogging
- Additional axes
- Track motion

Note

In a robot system with, for example, an additional axis or track motion, the Absolute Accuracy is active for the manipulator but not for the additional axis or track motion.

RAPID instructions

There are no RAPID instructions included in this option.

MultiMove

If the main robot in a MultiMove system has the Absolute Accuracy option, it opens up Absolute Accuracy capability for all the robots in the system. However, each robot needs to be calibrated individually.

Note

Note that this is the only RobotWare option that is relevant for an additional robot.

Continues on next page

© Copyright 2009-2019 ABB. All rights reserved.

Note

It is possible to mix robots with and without the option Absolute Accuracy arbitrarily in a MultiMove system.

Production data

Typical production data regarding calibration are:

Robot	Positioning accuracy (mm)		
	Average	Max	% Within 1 mm
IRB 4600-60/2.05	0.50	1.00	98
IRB 4600-45/2.05	0.40	0.80	100
IRB 4600-40/2.55	0.40	1.00	98
IRB 4600-20/2.50	0.40	0.80	100

© Copyright 2009-2019 ABB. All rights reserved.

1.5 Robot load and load diagrams

1.5.1 Introduction to Robot load and load diagrams

Information

WARNING

It is very important to always define correct actual load data and correct payload of the robot. Incorrect definitions of load data can result in overloading of the robot.

If incorrect load data and/or loads are outside load diagram is used the following parts can be damaged due to overload:

- motors
- gearboxes
- mechanical structure

WARNING

In the robot system is the service routine LoadIdentify available, which allows the user to make an automatic definition of the tool and load, to determine correct load parameters. Please see *Operating Manual - IRC5 with FlexPendant*, art. No. 3HAC16590-1, for detailed information.

WARNING

Robots running with incorrect load data and/or with loads outside diagram, will not be covered by robot warranty.

General

The load diagrams include a nominal payload inertia, J_0 of 2.5 kgm^2 for IRB 4600-60/2.05, -45/2.05, -40/2.55 and 0.06 kgm^2 for IRB 4600-20/2.50, and an extra load of 15 kg at the upper arm housing for IRB 4600-60/2.05, -45/2.05, -40/2.55 and 10 kg for IRB 4600-20/2.50.

At different moment of inertia the load diagram will be changed. For robots that are allowed tilted, or inverted mounted, the load diagrams as given are valid and thus it is also possible to use RobotLoad within those tilt and axis limits.

Control of load case by "RobotLoad"

To easily control a specific load case, use the calculation program ABB RobotLoad. Contact your local ABB organization for more information.

The result from RobotLoad is only valid within the maximum loads and tilt angles. There is no warning if the maximum permitted armload is exceeded. For over load cases and special applications, contact ABB for further analysis.

© Copyright 2009-2019 ABB. All rights reserved.

1.5.2 Load diagrams

IRB 4600 - 60/2.05

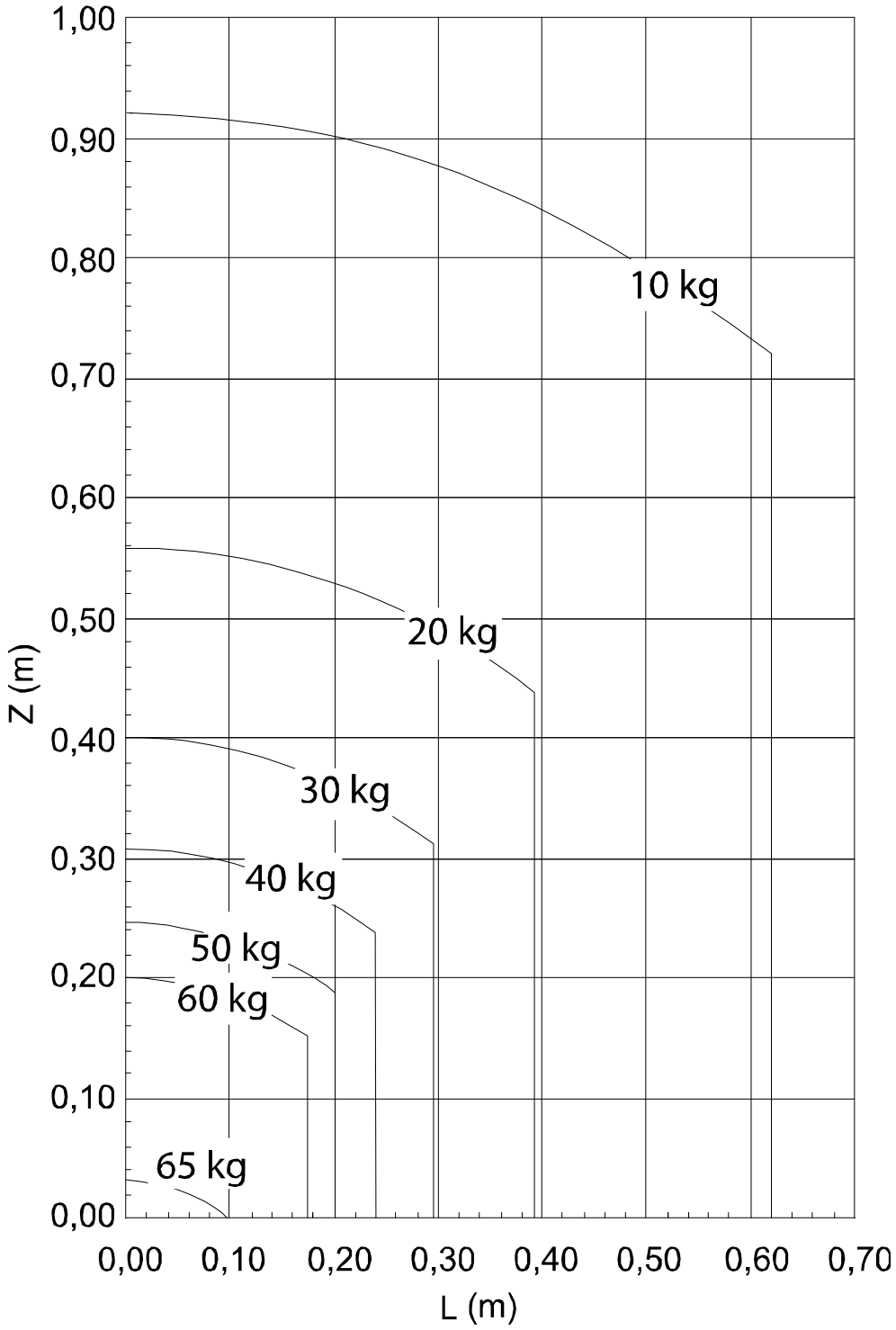

xx0800000448

Continues on next page

© Copyright 2009-2019 ABB. All rights reserved.

IRB 4600 - 60/2.05 "Vertical wrist" (+-10)

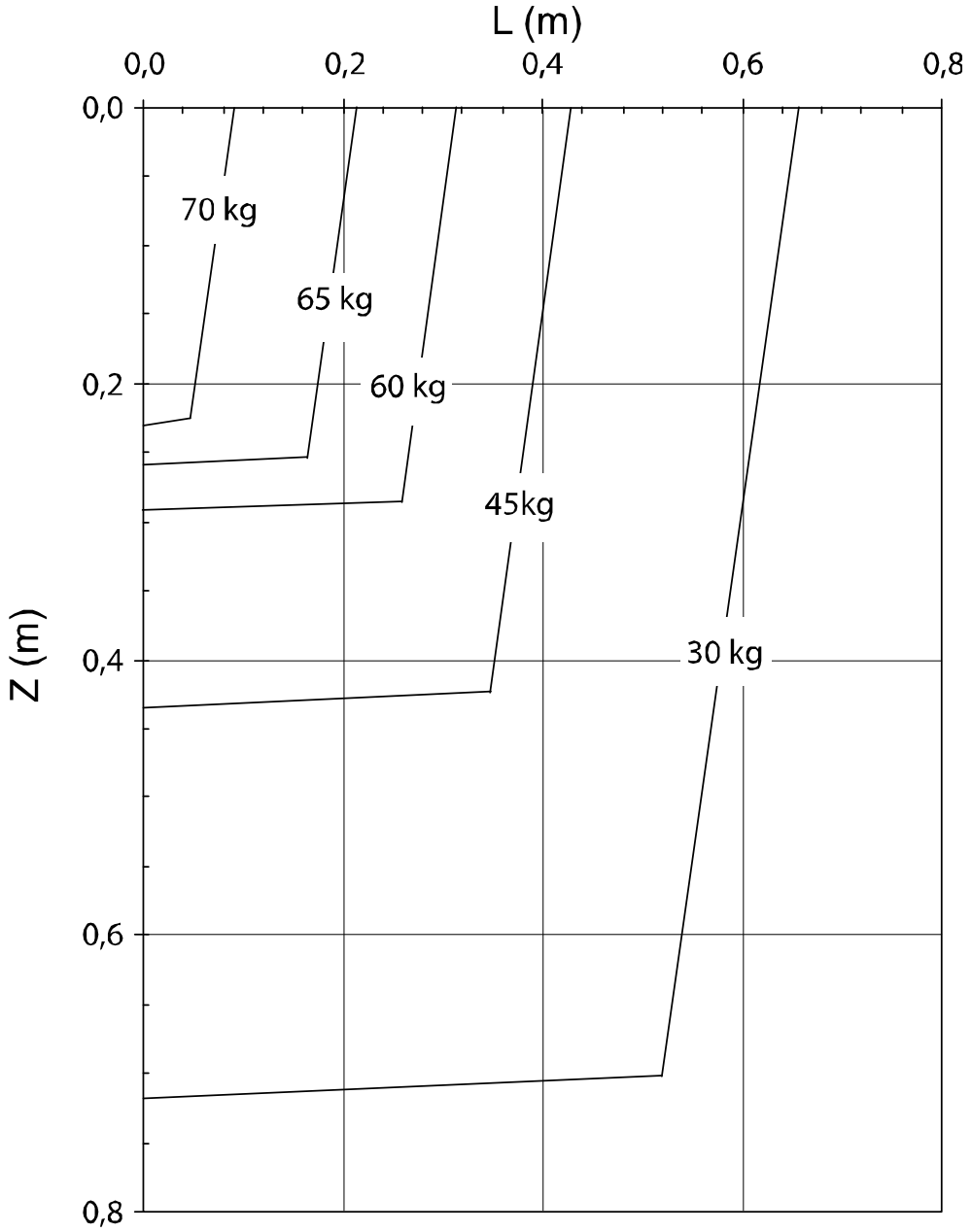

xx0900000070

For wrist down (0 deviation from the vertical line).

	Description
Max load	73 kg
Z_{max}	0,216 m
L_{max}	0,028 m

Continues on next page

© Copyright 2009-2019 ABB. All rights reserved.

IRB 4600 - 45/2.05

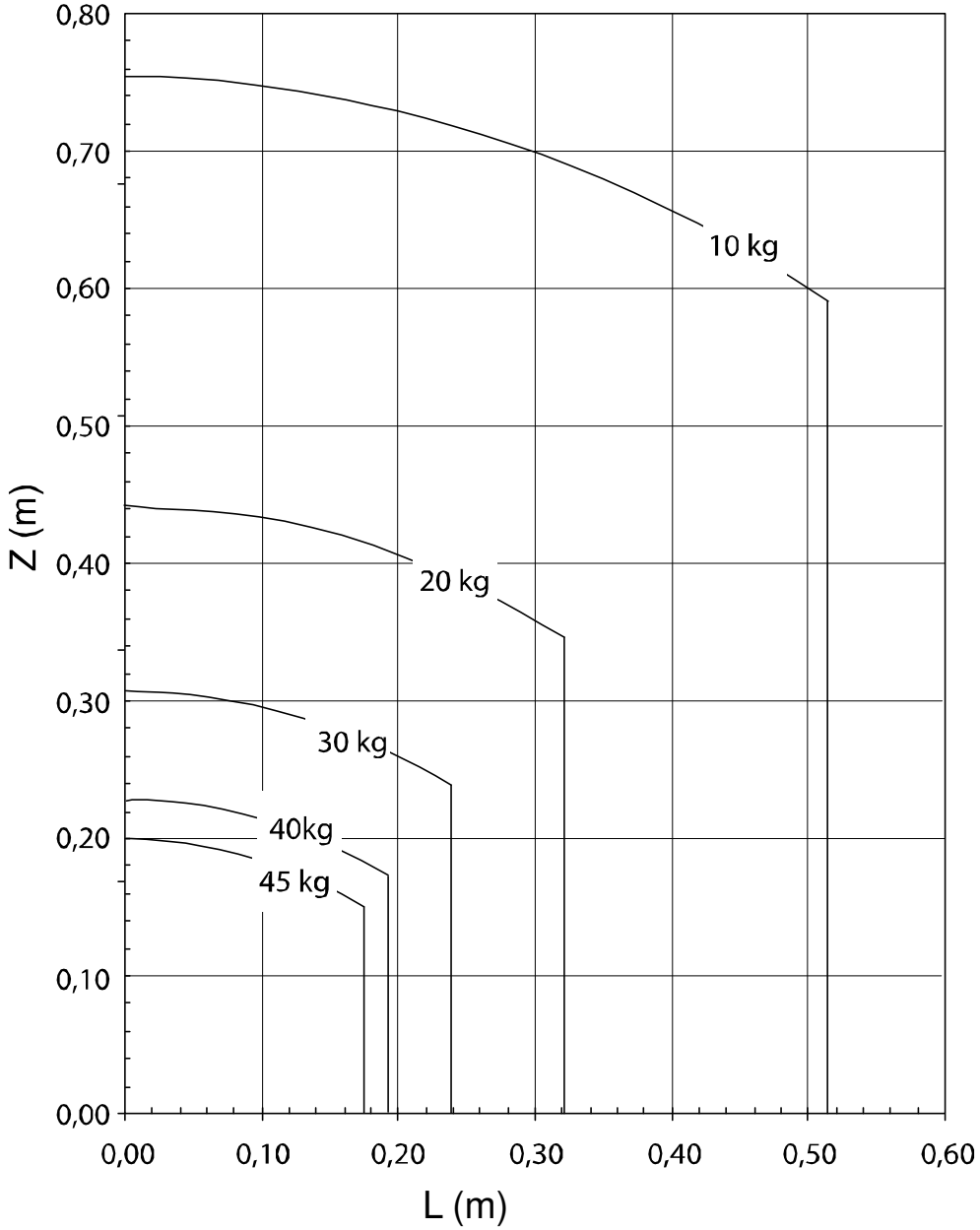

xx0900000069

Load diagram for "Vertical wrist" is not applicable for IRB 4600-45/2.05.

The above load diagram also valid for "Vertical wrist", no additional load allowed.

Continues on next page

© Copyright 2009-2019 ABB. All rights reserved.

IRB 4600 - 40/2.55

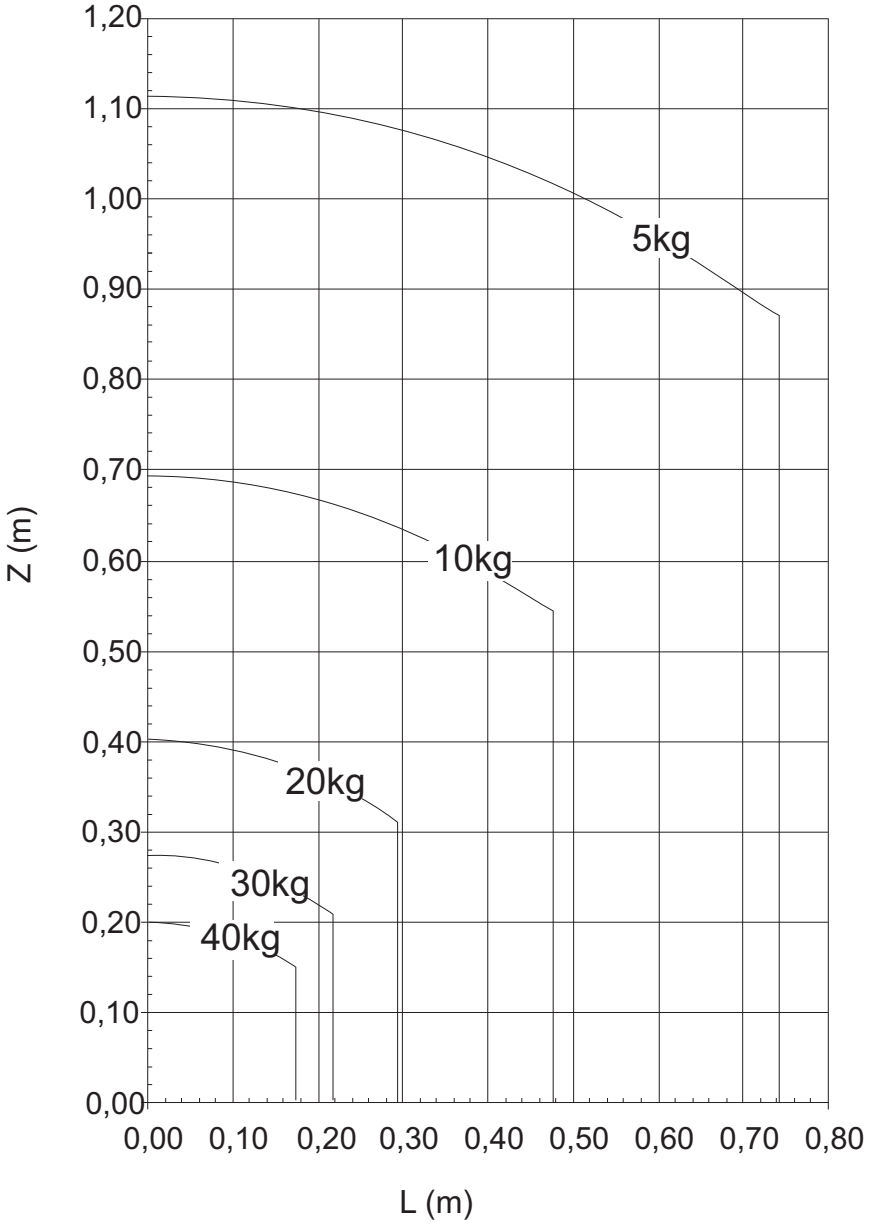

xx0800000447

Continues on next page

© Copyright 2009-2019 ABB. All rights reserved.

IRB 4600 - 40/2.55 "Vertical wrist" (+-10)

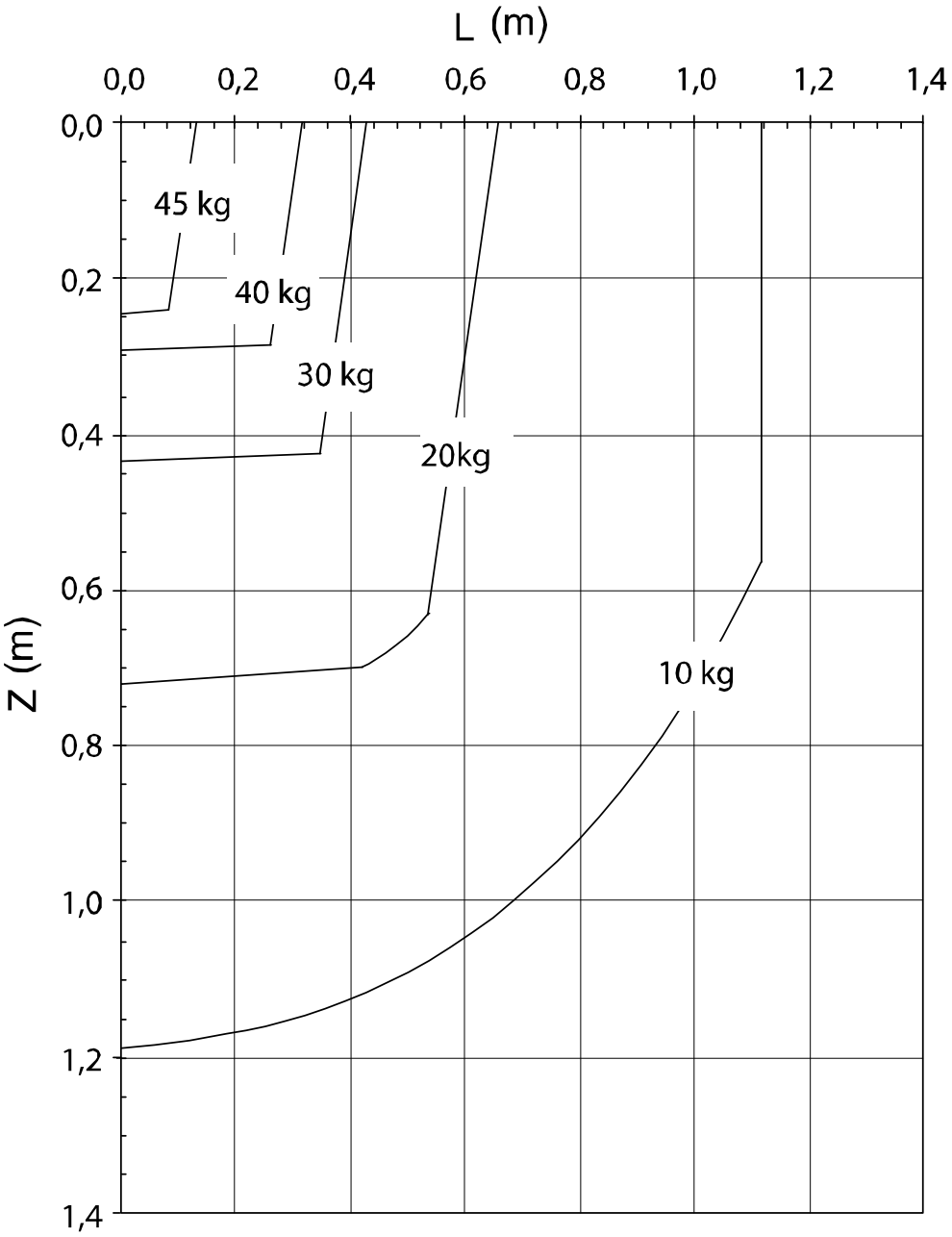

xx0900000068

For wrist down (0 deviation from the vertical line).

	Description
Max load	47 kg
Z_{max}	0,157 m
L_{max}	0,044 m

Continues on next page

© Copyright 2009-2019 ABB. All rights reserved.

IRB 4600 - 20/2.50

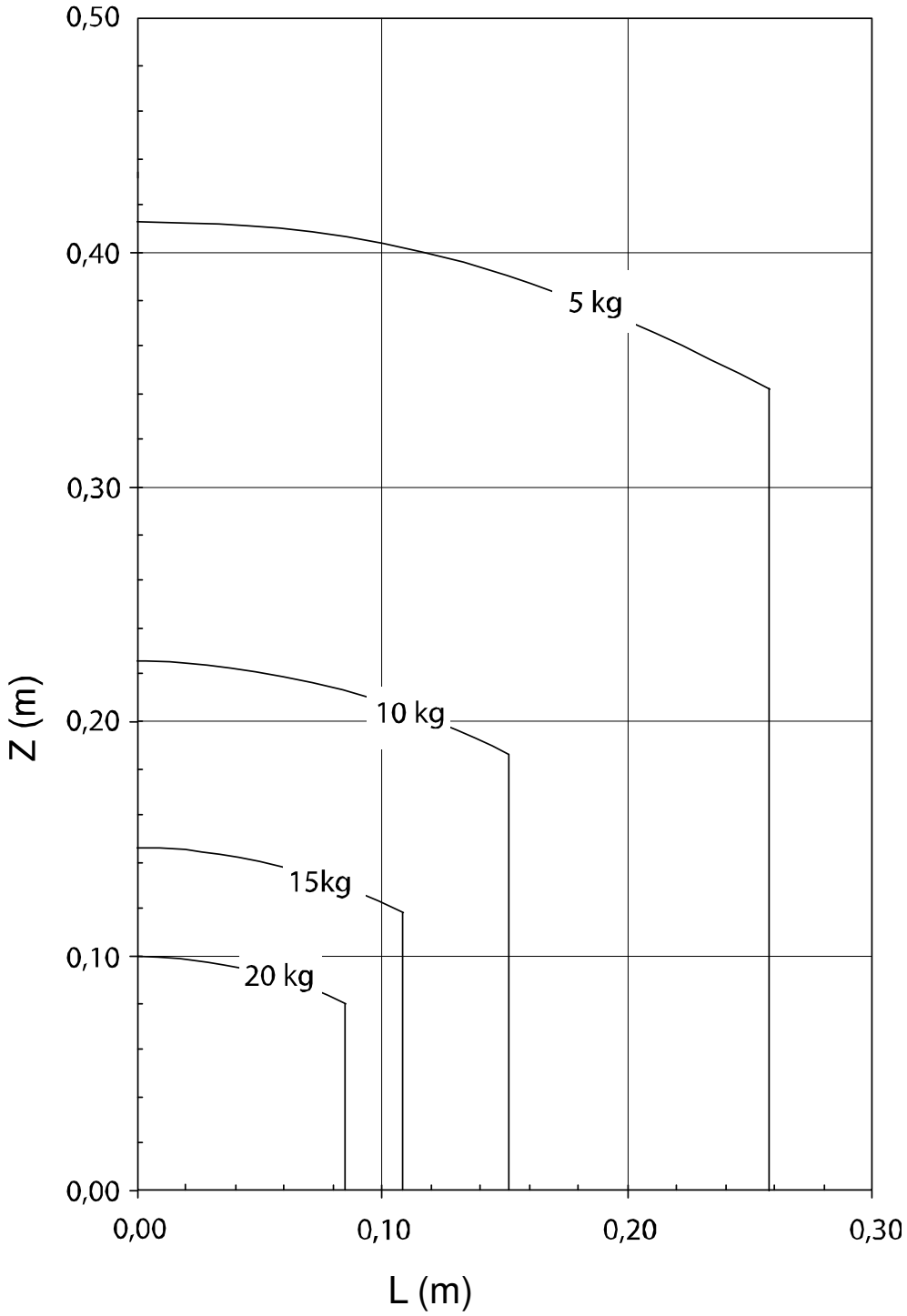

xx0900000071

Continues on next page

© Copyright 2009-2019 ABB. All rights reserved.

IRB 4600 - 20/2.50 "Vertical wrist" (+-10)

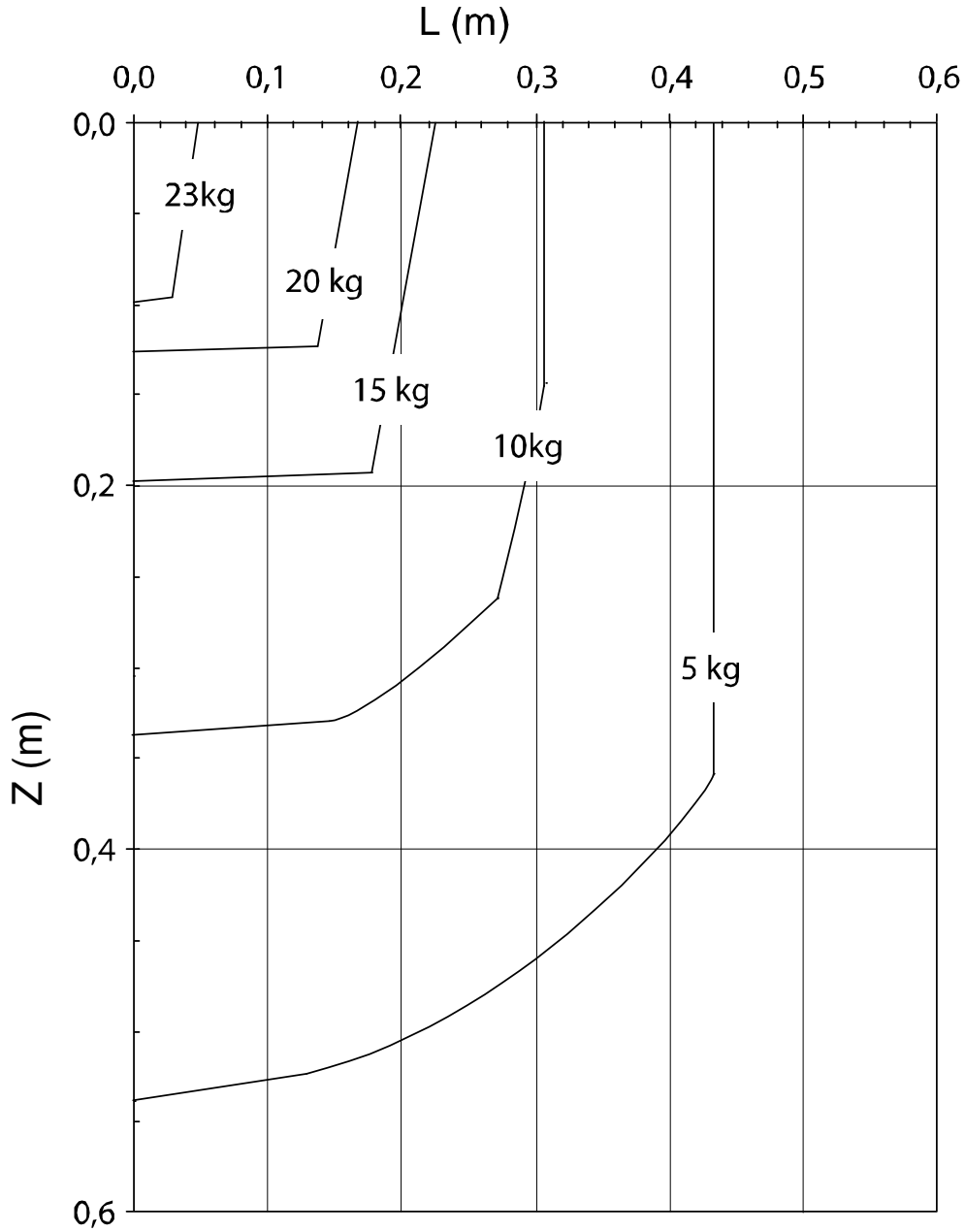

xx0900000067

For wrist down (0 deviation from the vertical line).

	Description
Max load	23 kg
Z_{max}	0,1 m
L_{max}	0,06 m

© Copyright 2009-2019 ABB. All rights reserved.

1.5.3 Maximum load and moment of inertia for full and limited axis 5 (centerlinedown) movement

Information

Note

Total load given as: Mass in kg, center of gravity (Z and L) in meter and moment of inertia (J_{ox} J_{oy} J_{oz}) in kgm^2. L=sqr(x^2 + y^2), see Figure 18

Full movement of axis 5

Axis	Robot Type	Maximum moment of inertia
5	60/2.05, 45/2.05	Ja5 = Load x $((Z + 0{,}135)^2 + L^2)$ + max (J_{0x}, J_{0y}) ≤ 30 kgm^2
	40/2.55	Ja5 = Load x $((Z + 0{,}135)^2 + L^2)$ + max (J_{0x}, J_{0y}) ≤ 20 kgm^2
	20/2.50	Ja5 = Load x $((Z + 0{,}085)^2 + L^2)$ + max (J_{0x}, J_{0y}) ≤ 2 kgm^2
6	60/2.05, 45/2.05	Ja6 = Load x L^2 + J_{0Z} ≤ 20 kgm^2
	40/2.55	Ja6 = Load x L^2 + J_{0Z} ≤ 15 kgm^2
	20/2.50	Ja6 = Load x L^2 + J_{0Z} ≤ 1 kgm^2

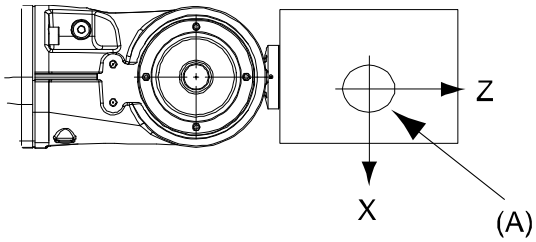

xx0800000458

Pos	Description
A	Center of gravity

	Description
J_{ox}, J_{oy}, J_{oz}	Max. moment of inertia around the X, Y and Z axes at center of gravity.

Continues on next page

© Copyright 2009-2019 ABB. All rights reserved.

1.5.3 Maximum load and moment of inertia for full and limited axis 5 (centerlinedown) movement
Continued

Limited axis 5, center line down

Axis	Robot Type	Maximum moment of inertia
5	60/2.05, 45/2.05	Ja5 = Load x $((Z + 0{,}135)^2 + L^2) + \max(J_{0x}, J_{0y}) \leq 30$ kgm^2
	40/2.55	Ja5 = Load x $((Z + 0{,}135)^2 + L^2) + \max(J_{0x}, J_{0y}) \leq 20$ kgm^2
	20/2.50	Ja5 = Load x $((Z + 0{,}085)^2 + L^2) + \max(J_{0x}, J_{0y}) \leq 2$ kgm^2
6	60/2.05, 45/2.05	Ja6 = Load x $L^2 + J_{0Z} \leq 20$kgm^2
	40/2.55	Ja6 = Load x $L^2 + J_{0Z} \leq 15$ kgm^2
	20/2.50	Ja6 = Load x $L^2 + J_{0Z} \leq 1$ kgm^2

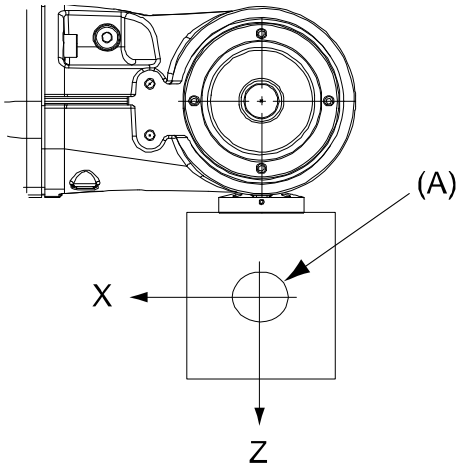

xx0800000459

Pos	Description
A	Center of gravity

	Description
J_{ox}, J_{oy}, J_{oz}	Max. moment of inertia around the X, Y and Z axes at center of gravity.

© Copyright 2009-2019 ABB. All rights reserved.

1.5.4 Wrist torque

Maximum torque due to payload

The table below shows the maximum permissible torque due to payload:

Note

The values are for reference only, and should not be used for calculating permitted load offset (position of center of gravity) within the load diagram, since those also are limited by main axes torques as well as dynamic loads. Also arm loads will influence the permitted load diagram, please contact your local ABB organization.

Robot type	Max wrist torque axis 4 and 5	Max wrist torque axis 6	Max torque valid at load
IRB 4600 - 60/2.05	200 Nm	105 Nm	60 kg
IRB 4600 - 45/2.05	145 Nm	77 Nm	45 kg
IRB 4600 - 40/2.55	132 Nm	68 Nm	40 kg
IRB 4600 - 20/2.50	37 Nm	15 Nm	20 kg

© Copyright 2009-2019 ABB. All rights reserved.

1.5.5 Maximum TCP acceleration

General

Higher values can be reached with lower loads than the nominal because of our dynamical motion control QuickMove2. For specific values in the unique customer cycle, or for robots not listed in the table below, we recommend then to use RobotStudio.

Maximum Cartesian design acceleration for nominal loads

Robot type	E-stop Max acceleration at nominal load COG [m/s^2]	Controlled Motion Max acceleration at nominal load COG [m/s^2]
IRB 4600 - 60/2.05	69	35
IRB 4600 - 40/2.55	77	49
IRB 4600 - 20/2.50	96	65

Note

Acceleration levels for E-stop and controlled motion includes acceleration due to gravitational forces. Nominal load is define with nominal mass and cog with max offset in Z and L (see load diagram).

© Copyright 2009-2019 ABB. All rights reserved.

1.6 Mounting equipment

1.6.1 Information about mounting equipment

General

Extra loads can be mounted on the wrist, the upper arm housing and on the frame. Definitions of load areas and permitted load are shown in. The center of gravity of the extra load shall be within the marked load areas. The robot is supplied with holes for mounting of extra equipment. (See figures in *Holes for mounting of extra equipment on page 46*.)

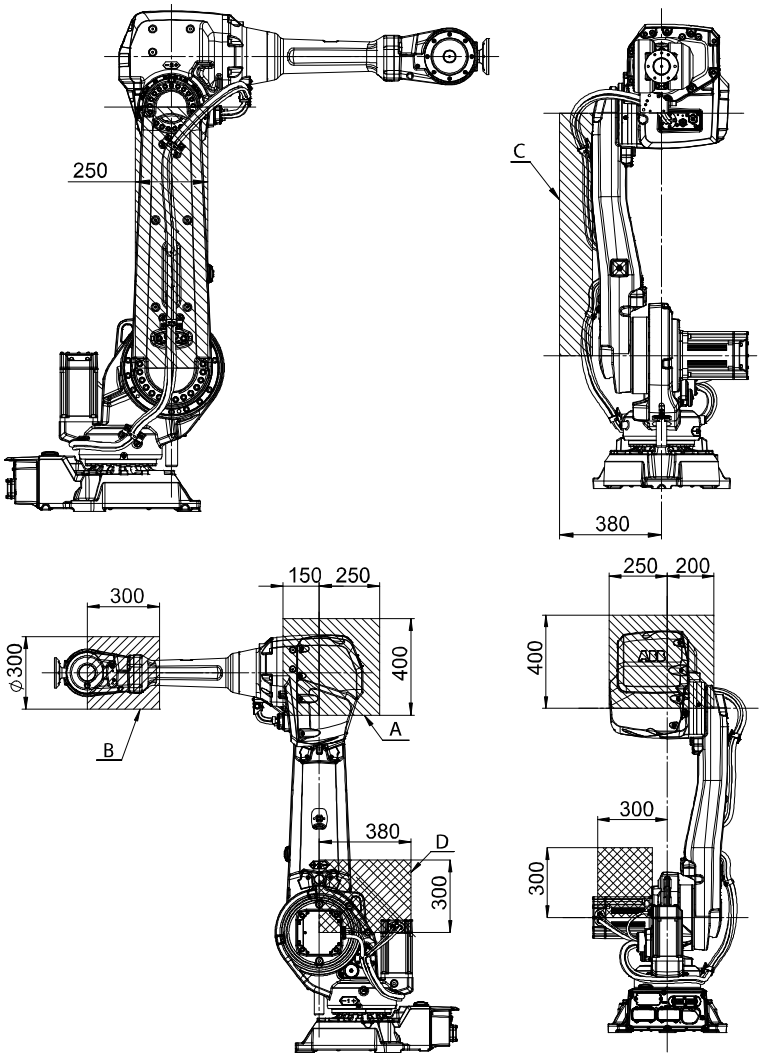

xx0800000434

Load area Robot	Max load				
	A	B	C	A+C	D
IRB 4600 - 60/2.05	15 kg	5 kg [a]	15 kg	15 kg	35 kg
IRB 4600 - 45/2.05	15 kg	5 kg [b]	15 kg	15 kg	35 kg
IRB 4600 - 40/2.55	15 kg	5 kg [c]	15 kg	15 kg	35 kg

Continues on next page

© Copyright 2009-2019 ABB. All rights reserved.

1.6.1 Information about mounting equipment
Continued

Load area Robot	Max load				
	A	B	C	A+C	D
IRB 4600 - 20/2.50	10 kg	1 kg	10 kg	10 kg	35 kg

a. Payload + B max 60kg

b. Payload + B max 45kg

c. Payload + B max 40kg

Holes for mounting of extra equipment

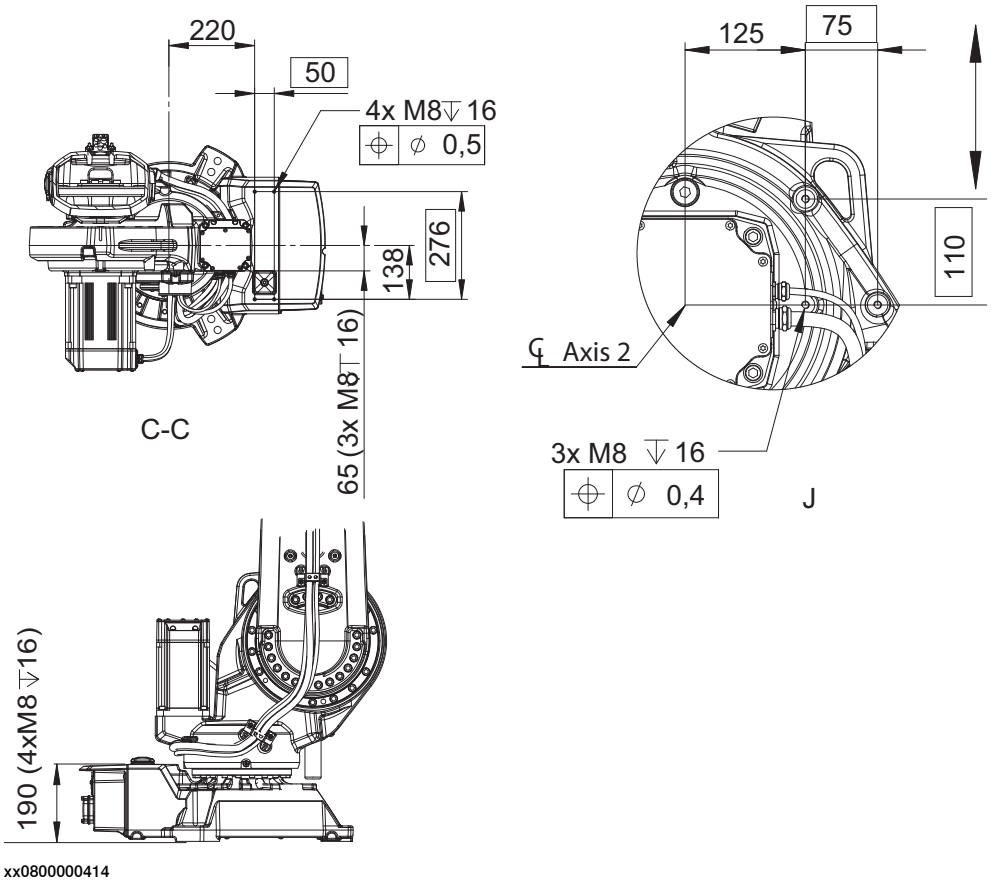

xx0800000414

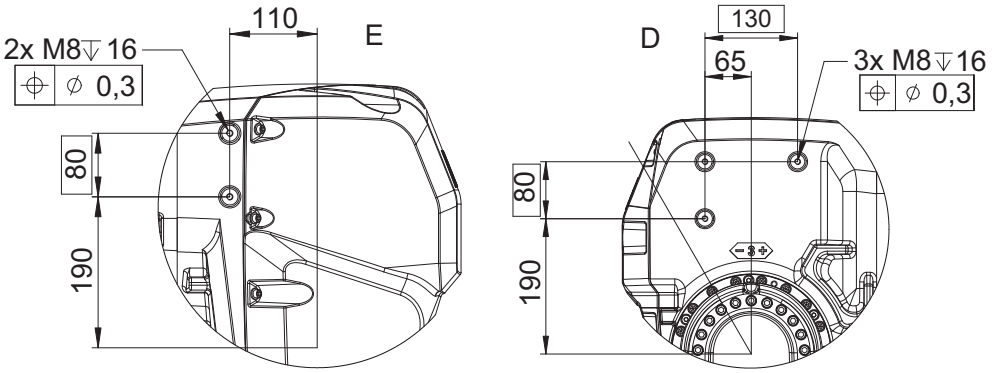

xx0800000412

Continues on next page

© Copyright 2009-2019 ABB. All rights reserved.

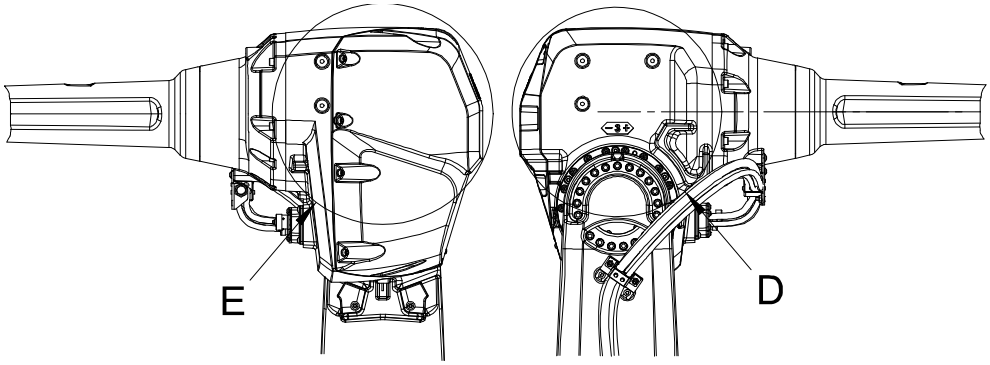

xx0800000419

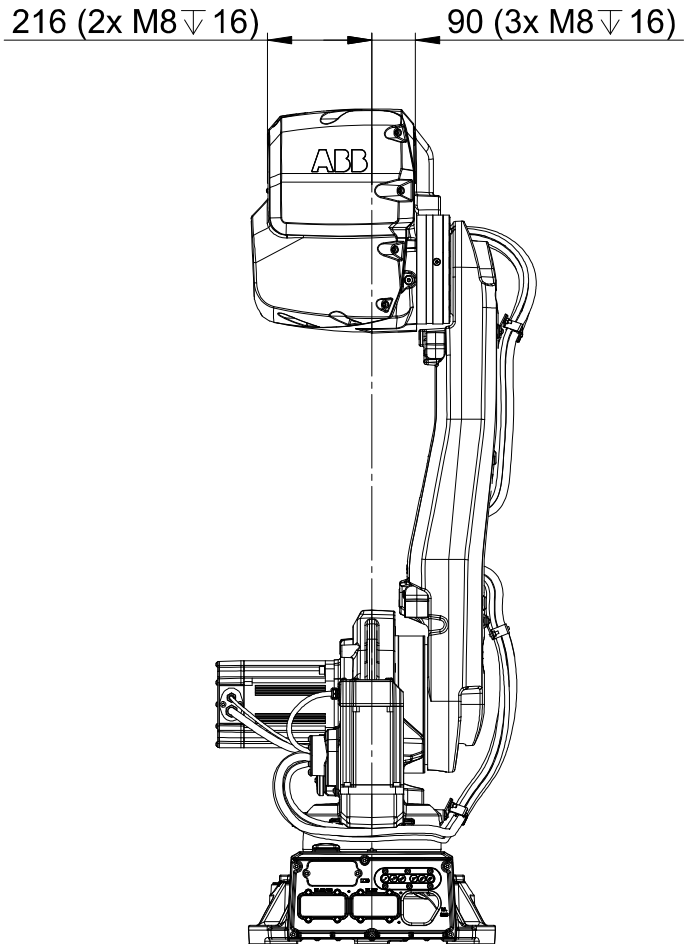

xx0800000418

Continues on next page

© Copyright 2009-2019 ABB. All rights reserved.

1.6.1 Information about mounting equipment
Continued

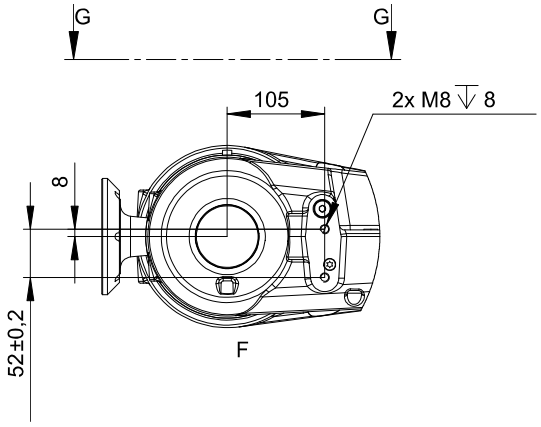

xx0800000416

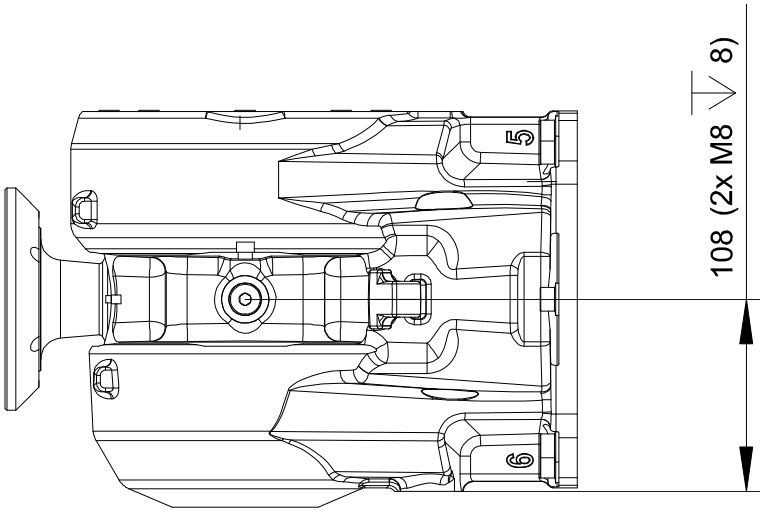

G-G

xx0800000417

F

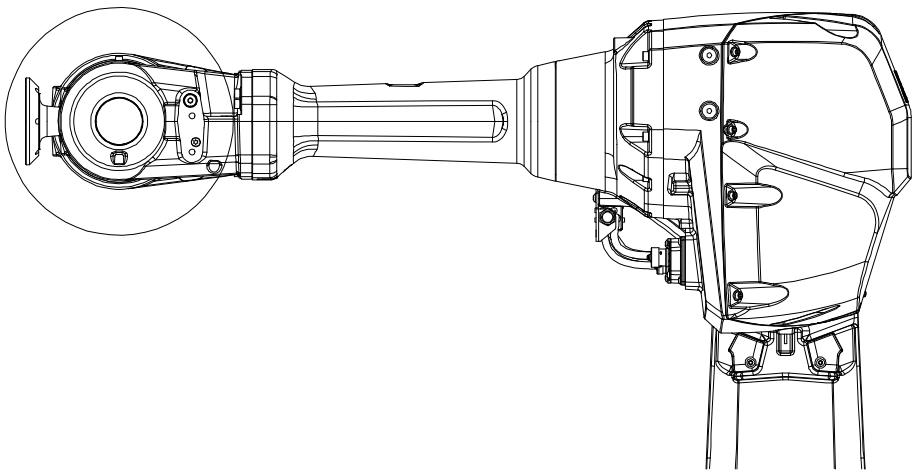

xx0800000421

Continues on next page

© Copyright 2009-2019 ABB. All rights reserved.

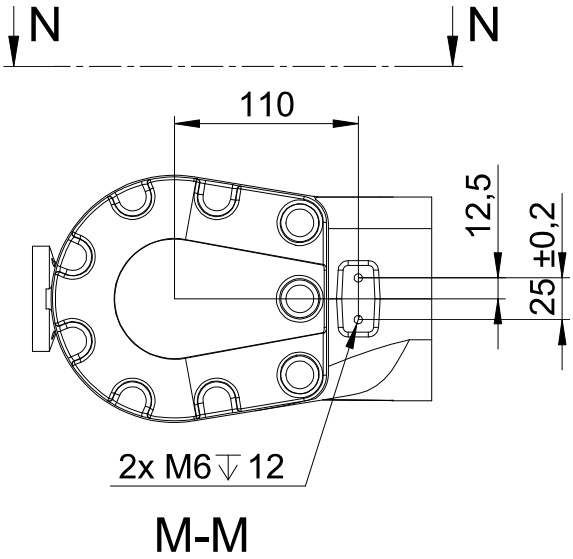

xx0800000409

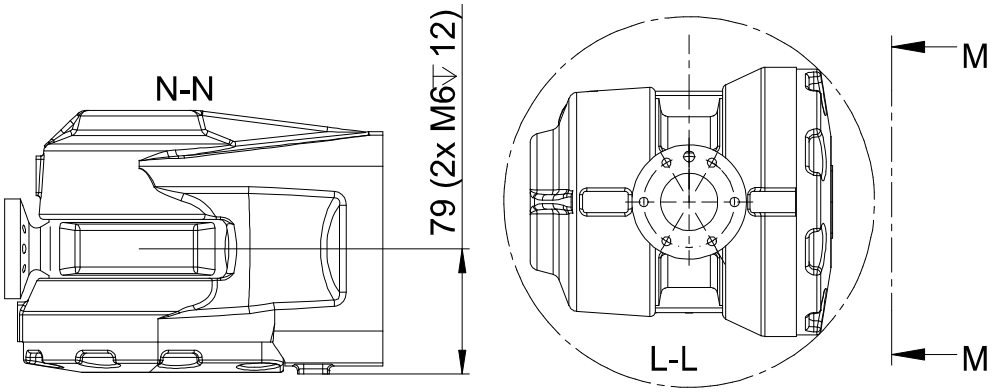

xx0800000408

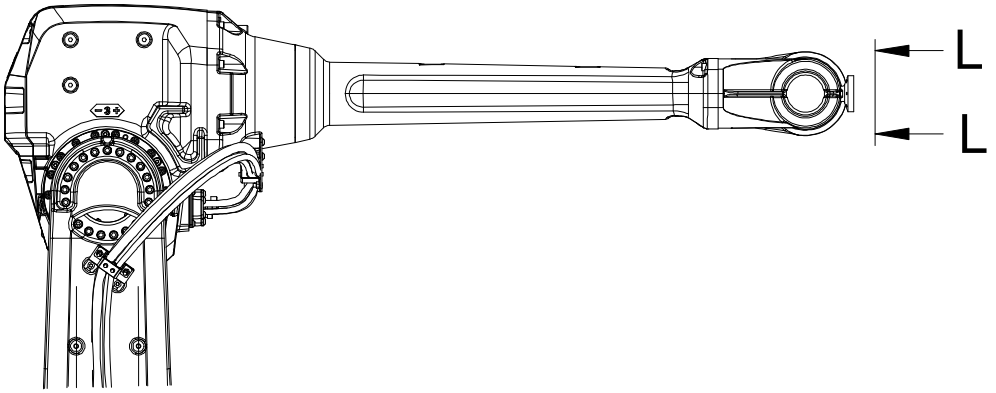

xx0800000411

Continues on next page

© Copyright 2009-2019 ABB. All rights reserved.

1.6.1 Information about mounting equipment
Continued

IRB 4600-40/2.55 and IRB 4600-20/2.50

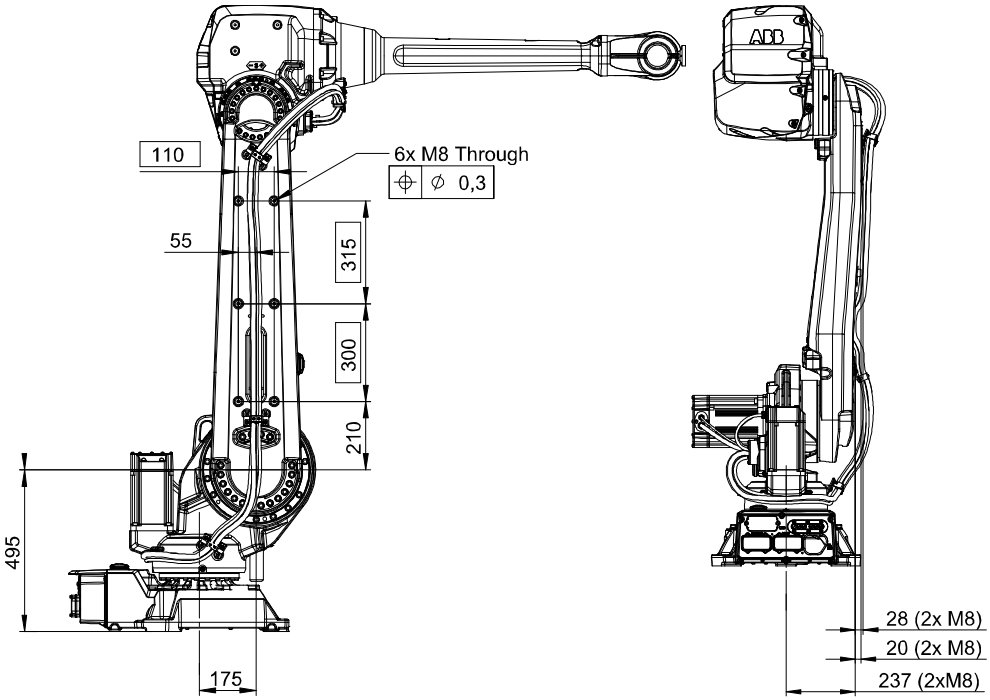

xx0800000423

IRB 4600 60(45)/2.05

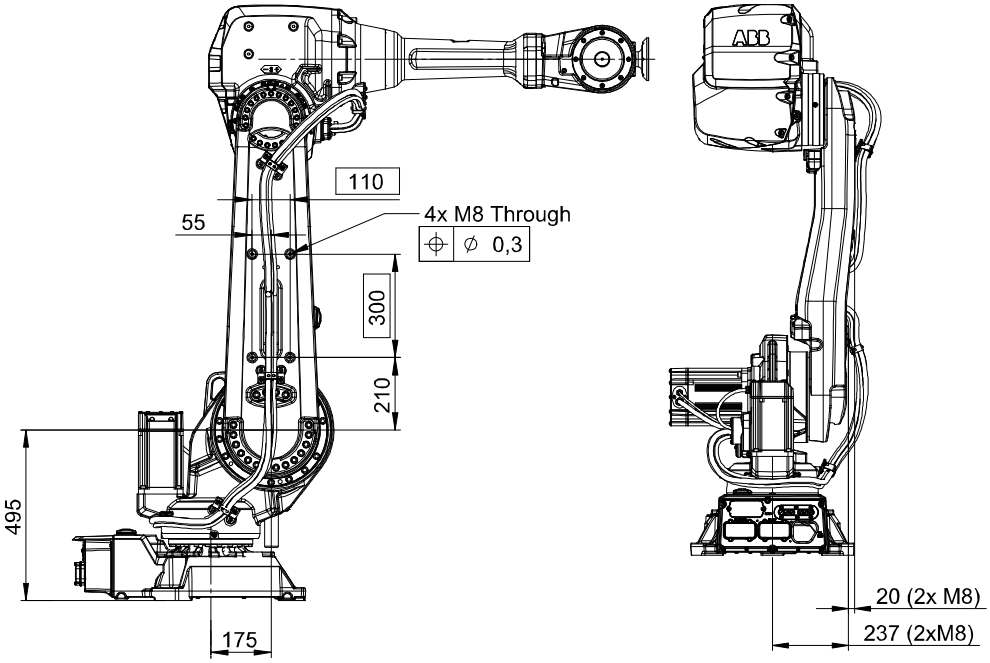

xx0800000425

Continues on next page

© Copyright 2009-2019 ABB. All rights reserved.

Tool flange

IRB 4600-20/2.50

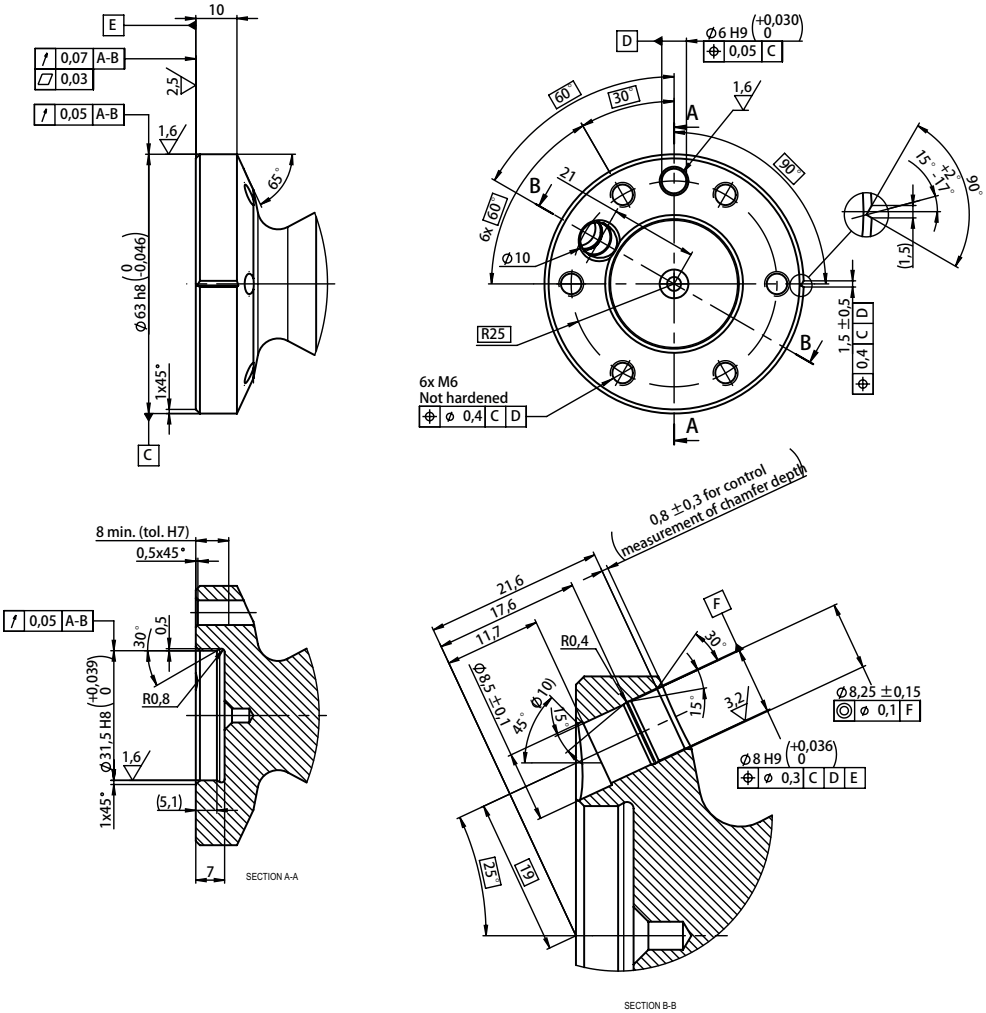

xx0800000449

Continues on next page

© Copyright 2009-2019 ABB. All rights reserved.

1.6.1 Information about mounting equipment
Continued

IRB 4600-60/2.05, IRB4600-45/2.05 and IRB 4600-40/2.55

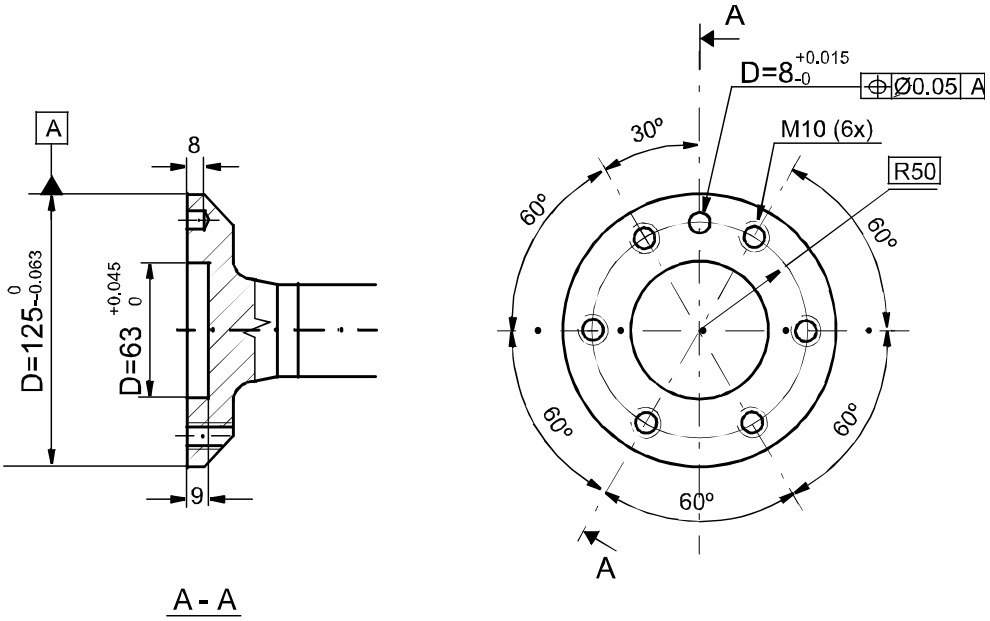

xx0800000450

For fastening of Gripper tool flange to Robot tool flange every other one of the screw holes for 6 screws, quality class 12.9 shall be used. Min. 15 mm free threads lenght.

© Copyright 2009-2019 ABB. All rights reserved.

1.7 Maintenance and troubleshooting

1.7.1 Introduction to Maintenance and Troubleshooting

General

The robot requires only minimum maintenance during operation. It has been designed to make it as easy to service as possible:

- Maintenance-free AC motors are used.
- Oil is used for the gear boxes.
- The cabling is routed for longevity, and in the unlikely event of a failure, its modular design makes it easy to change.

Maintenance

The maintenance intervals depend on the use of the robot, the required maintenance activities also depends on selected options. For detailed information on maintenance procedures, see Maintenance section in the Product Manual.

© Copyright 2009-2019 ABB. All rights reserved.

1.8 Robot motion

1.8.1 Introduction to Robot Motion

IRB 4600

Axis	Type of motion	Range of movement
1	Rotation Motion	+ 180° to - 180°
2	Arm motion	+ 150° to - 90°
3	Arm motion	+ 75° to - 180°
4	Rotation motion	+ 400° to - 400° Default + 201 rev.[a] to - 201 rev. Max.[c]
5	Bend motion	+ 120° to - 125° [b]
6	Turn motion	+ 400° to - 400° Default + 241 rev.[a] to - 241[c] rev. Max.[d]

a. rev. = Revolutions.

b. IRB 4600-20/2.50, + 120° to -120°.

c. Valid for IRB 4600-20/2.50 is + 183 to - 183 rev. d. The default working range for axis 4 and axis 6 can be extended by changing parameter values in the software. Option 610-1 "Independent axis" can be used for resetting the revolution counter after the axis has been rotated (no need for "rewinding" the axis)

Note

A collision with the air vent mounted on the base for Foundry Prime robots, will occur if axis 1 is in the range of -100° to -180° and axis 2 is moved to a backward position of more than +115°.

Continues on next page

© Copyright 2009-2019 ABB. All rights reserved.

Working range, floor mounted

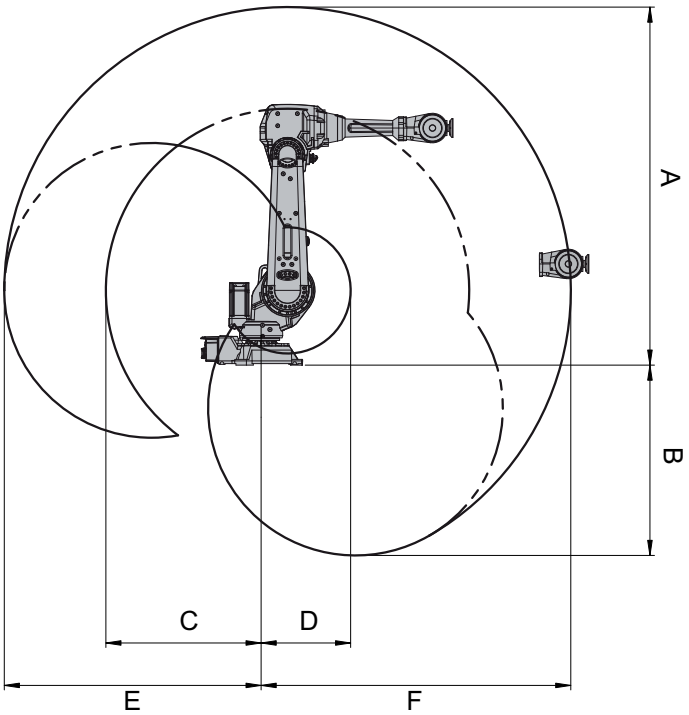

xx0900000119

Variant	Pos. A	Pos. B	Pos. C	Pos. D	Pos. E	Pos. F
IRB 4600-60/2.05	2371 mm	1260 mm	1028 mm	593 mm	1701 mm	2051 mm
IRB 4600-45/2.05	2371 mm	1260 mm	1028 mm	593 mm	1701 mm	2051 mm
IRB 4600-40/2.55	2872 mm	1735 mm	1393 mm	680 mm	2202 mm	2552 mm
IRB 4600-20/2.50	2833 mm	1696 mm	1361 mm	665 mm	2163 mm	2513 mm

© Copyright 2009-2019 ABB. All rights reserved.

1.8.2 Performance according to ISO 9283

General

At rated maximum load, maximum offset and 1.6 m/s velocity on the inclined ISO test plane, 1m cube with all six axes in motion. Values in the table below are the average result of measurements on a small number of robots. The result may differ depending on where in the working range the robot is positioning, velocity, arm configuration, from which direction the position is approached, the load direction of the arm system. Backlashes in gearboxes also affect the result.

The figures for AP, RP, AT and RT are measured according to figure below.

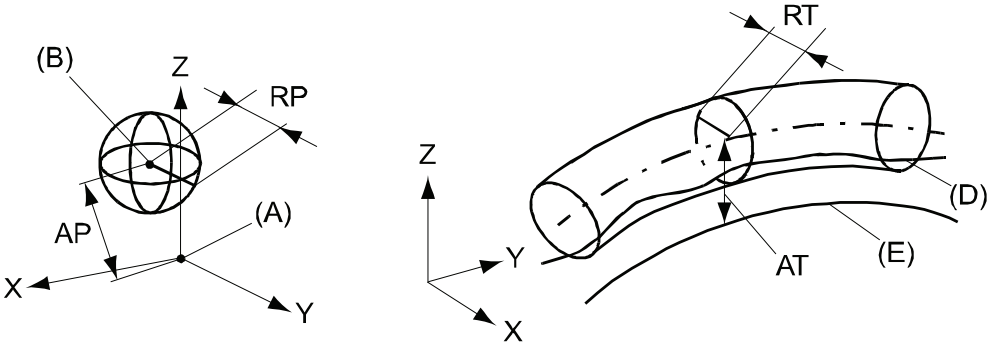

xx0800000424

Pos	Description	Pos	Description
A	Programmed position	E	Programmed path
B	Mean position at program execution	D	Actual path at program execution
AP	Mean distance from programmed position	AT	Max deviation from E to average path
RP	Tolerance of position B at repeated positioning	RT	Tolerance of the path at repeated program execution

Description	IRB 4600			
	- 60/2.05	-45/2.05	- 40/2.55	- 20/2.50
Pose repeatability, RP (mm)	0.06	0.05	0.06	0.05
Pose accuracy, AP[a] (mm)	0.02	0.02	0.02	0.03
Linear path repeatability, RT[b] (mm)	0.46	0.13	0.28	0.17
Linear path accuracy, AT[b] (mm)	0.74	0.48	0.57	0.93
Pose stabilization time, (PSt) to within 0.4 mm of the position (s)	0.10	0.13	0.40	0.19

a.AP according to the ISO test above, is the difference between the reached position (position manually modified in the cell) and the average position obtained during program execution

b. The values for RT and AT are measured at a velocity of 250 mm/s

The above values are the range of average test results from a number of robots.

© Copyright 2009-2019 ABB. All rights reserved.

1.8.3 Velocity

Maximum axis speed

Robot Type	Axis 1	Axis 2	Axis 3	Axis 4	Axis 5	Axis 6
IRB 4600 - 60/2.05	175 °/s	175 °/s	175 °/s	250 °/s	250 °/s	360 °/s
IRB 4600 - 45/2.05	175 °/s	175 °/s	175 °/s	250 °/s	250 °/s	360 °/s
IRB 4600 - 45/2.55	175 °/s	175 °/s	175 °/s	250 °/s	250 °/s	360 °/s
IRB 4600 - 20/2.50	175 °/s	175 °/s	175 °/s	360 °/s	360 °/s	500 °/s

There is a supervision function to prevent overheating in applications with intensive and frequent movements.

Axis Resolution

0.001° to 0.005°.

© Copyright 2009-2019 ABB. All rights reserved.

1.8.4 Robot stopping distances and times

Introduction

The stopping distances and times for category 0 and category 1 stops, as required by EN ISO 10218-1 Annex B, are listed in *Product specification - Robot stopping distances according to ISO 10218-1* (*3HAC048645-001*).

© Copyright 2009-2019 ABB. All rights reserved.

1.9 Cooling fan for axis 1-2 motor

Option 87-1, 88-1

To be used to avoid overheating of motors and gears in applications with intensive motion (high average speed and /or high average torque and/or short wait time) of axis 1 and/or axis 2.

Valid protection for cooling fan is IP54.

To determine the use of cooling fans for axis 1 and/or axis 2 motor use the “Gearbox Heat Prediction Tool” in RobotStudio. Reliable facts for the decision of need for fan or not will be achieved by entering the ambient temperature for a specific cycle. Please contact your local ABB organization.

© Copyright 2009-2019 ABB. All rights reserved.

1.10 Customer connections

1.10.1 Introduction to Customer connections

General

Customer connections are options, the cables for them are integrated in the robot and the connectors are placed on the upper arm housing and at the base. One UT0W71210SH06 connector (R2. CP(/ETHERNET)) and one UT0W71626H06 connector (R2.CS(/CP)). Corresponding connectors, R1.CP(/ETHERNET) and R1.CS(/CP) are located at the base.Hose for compressed air is also integrated into the manipulator. There is an (M16-3/8” hose) inlet at the base and an outlet on the rear part of the upper arm.

Customer connections:

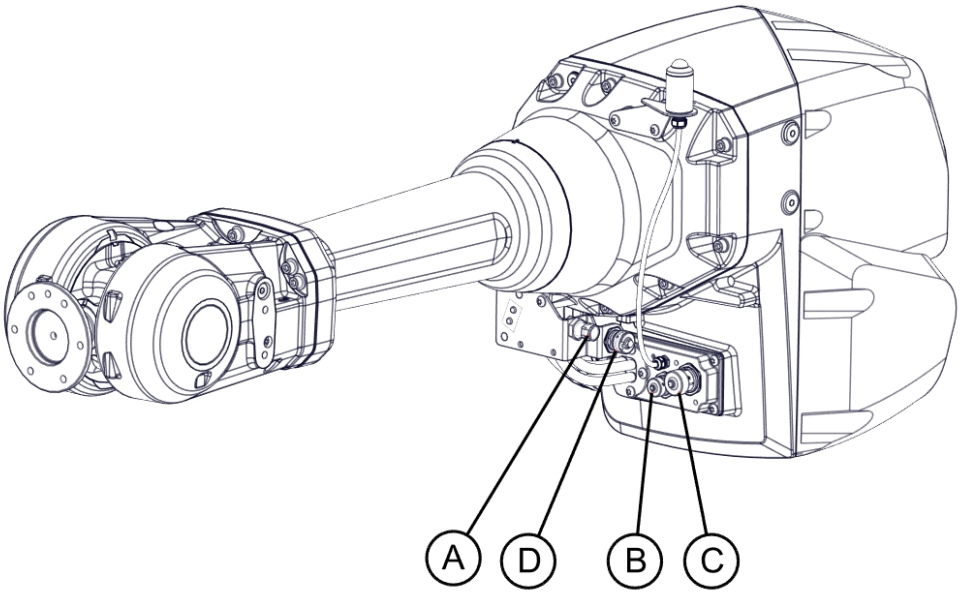

xx1700002241

Pos	Connection	Description	Quantity	Value
A	Air M16x1.5 (24° cone sealing)	max 8 bar	1	Inner hose diameter 9.5 mm
B	R2.CP	Customer power	4 [i]	300 V, 2 A
C	R2.CS	Customer signals	23	50 V, 0.5 A
D	R2.ETHERNET	Multibus comm.		PROFINET, EtherNet/IP DeviceNet PROFIBUS

[i] One protected ground is included.

Continues on next page

© Copyright 2009-2019 ABB. All rights reserved.

Customer connections base:

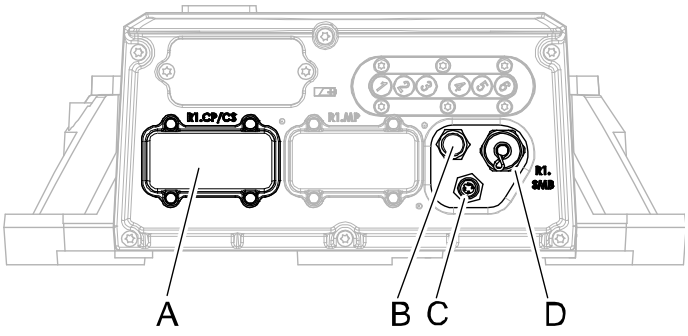

xx0800000288

A	R1.CP/CS
B	Air M16x1.5
C	R1.ETHERNET
D	R1.SMB

© Copyright 2009-2019 ABB. All rights reserved.

This page is intentionally left blank

2 Specification of variants and options

2.1 Introduction to variants and options

General

The different variants and options for the IRB 4600 are described in the following sections. The same option numbers are used here as in the specification form.

The variants and options related to the robot controller are described in the product specification for the controller.

© Copyright 2009-2019 ABB. All rights reserved.

2.2 Manipulator

Variants

Option	IRB Type	Handling capacity (kg) / Reach (m)
435-84	IRB 4600	60/2.05
435-85	IRB 4600	45/2.05
435-86	IRB 4600	40/2.55
435-94	IRB 4600	20/2.50

Manipulator color

Option	Description	Note
209-1	ABB Orange standard	
209-2	ABB White standard	
209-202	ABB Graphite White standard	Standard color
209-4--192	The manipulator is painted with the chosen RAL-color.	

Note

Notice that delivery time for painted spare parts will increase for none standard colors.

Protection types

Option	Protection type	Note
287-4	Standard	IP 67
287-3	Foundry Plus 2	See *Protection type Foundry Plus 2 on page 11* for a complete description of protection type Foundry Plus 2.
287-6	Foundry Prime 2	See *Protection type Foundry Prime 2 on page 12* for a complete description of protection type Foundry Prime 2. Only available for robot versions IRB 4600-60/2.05. The following options are NOT selectable together with option 287-6: • 209-2 ABB White standard • 209 RAL code • 213-1 Safety lamp • 87-1 Cooling fan for axis 1 motor • 88-1 Cooling fan for axis 2 motor • 429-1 Underwriters Laboratories • 438-2 Standard + 12 Months • 438-4 Standard + 18 Months • 438-5 Standard + 24 Months • 438-6 Standard + 6 Months • Limitation of working range for axis 1 and 2, see Limitation for Foundry Prime option.

Continues on next page

© Copyright 2009-2019 ABB. All rights reserved.

Media & Communication

If 803-2, 803-3, or 803-4 is chosen, there are fewer customer connections, see *Customer connections on page 60*.

Option	Type	Description
803-1	Parallel and pair communication	Includes customer power CP and customer signals CS + air.
803-2	Ethernet, parallel and air communication	Includes CP, CS and PROFINET or Ethernet/IP + air.
803-3	DeviceNet, parallel and air communication	Includes CP, CS and Devicenet + air
803-4	PROFIBUS	Includes CP, CS and PROFIBUS + air

Customer connection.

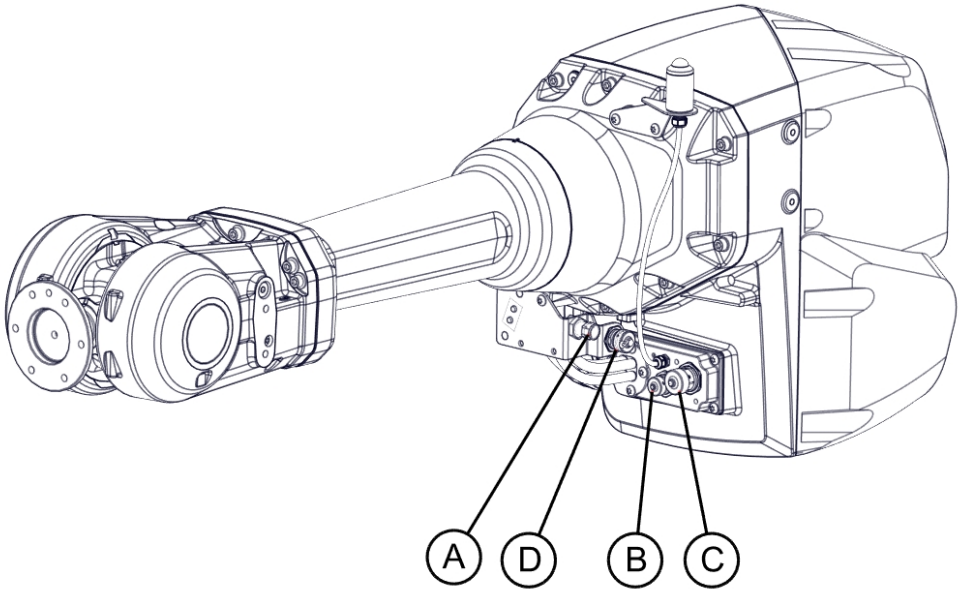

xx1700002241

A	Air M16x1.5 (24° cone sealing)
B	R2.CP
C	R2.CS
D	R2.ETHERNET

Connector kit

The kit consists of connectors, pins and sockets

Option	Description
431-1	For the connectors on the upper arm.
239-1	For the connectors on the foot if connection to manipulator.

Continues on next page

© Copyright 2009-2019 ABB. All rights reserved.

Safety lamp

Option	Description
213-1	Safety lamp safety lamp with an orange fixed light can be mounted on the manipulator.The lamp is active in MOTORS ON mode.The safety lamp is required on a UL/UR approved robot.

Cooling fans for axis 1 and 2 motor

To be used to avoid overheating of motors and gears in application with intensive motion (high average speed and/or high average torque and/or short wait time) of axis 1 and axis 2. IP54 valid for cooling fan.

Option	Description
87-1	Cooling fan for axis 1 motor.
88-1	Cooling fan for axis 2 motor.

Resolver connection, axis 7

A connector for resolver signals for axis 7 located on the base

Option	Description	Remark
864-1	On base	Used together with first additional drive, option 907-1.

Foundry Plus Cable Guard

The manipulator cables are equipped with an additional protection of aluminized leather against e.g. aluminium spitz and flashes and chips from machining.

Option	Type	Description
908-1	Foundry Plus Cable Guard	For extra protection of cables. Requires option 287-3 Foundry Plus.

Electronic Position Switches (EPS)

The mechanical position switches indicating the position of the three main axes are replaced with electronic position switches for up to 7 axes, for increased flexibility and robustness. For more detailed information, see *Product specification - Controller IRC5* and *Application manual - Electronic Position Switches*.

Working range limit-Axis 1

The working range of axis 1 can be limited between ± 129° to ± 16.5° in steps of 22.5°

Option	Description
28-1 Axis 1	Two stops for restricting the working range.The stops can be mounted according to example in.

Continues on next page

© Copyright 2009-2019 ABB. All rights reserved.

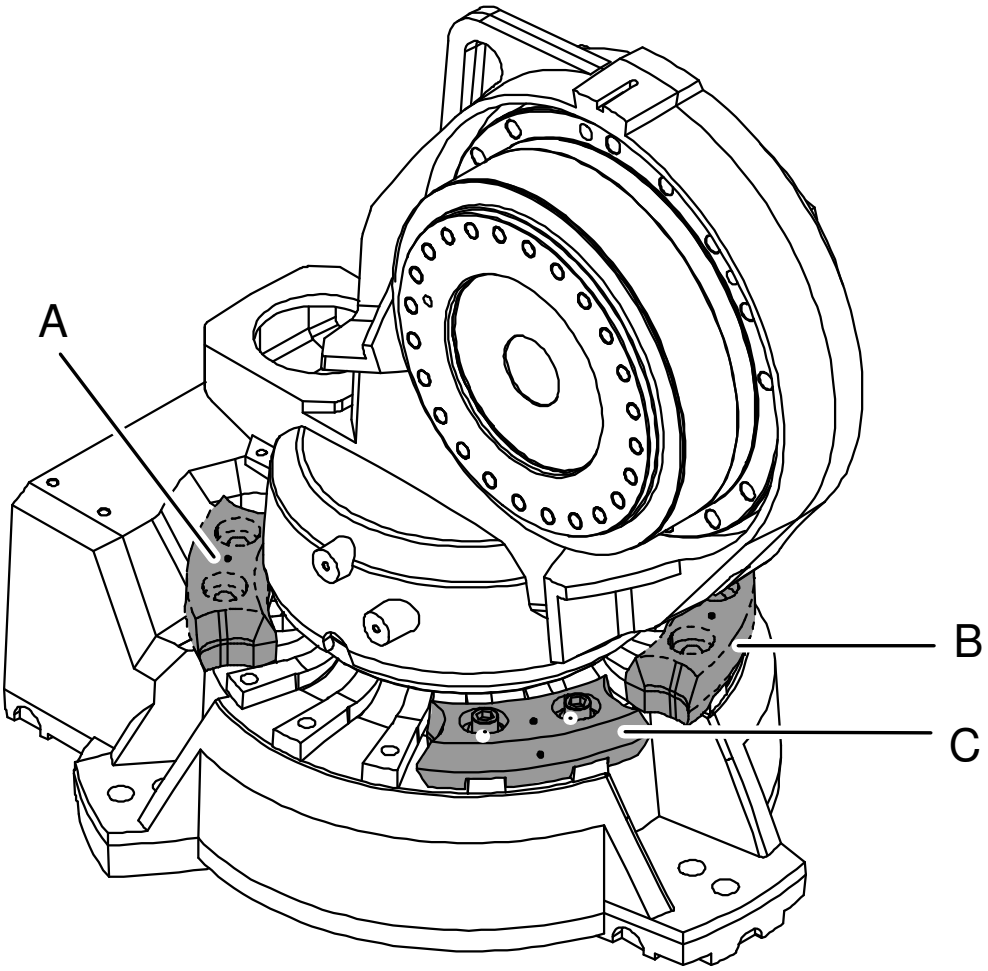

xx0800000410

Pos	Description
A	Movable mechanical stop, limited to - 129°
B	Movable mechanical stop, limited to + 16.5°
C	Movable mechanical stop, limited to - 16.5°

Warranty

Option	Type	Description
438-1	Standard warranty	Standard warranty is 12 months from *Customer Delivery Date* or latest 18 months after *Factory Shipment Date*, whichever occurs first. Warranty terms and conditions apply.
438-2	Standard warranty + 12 months	Standard warranty extended with 12 months from end date of the standard warranty. Warranty terms and conditions apply. Contact Customer Service in case of other requirements.
438-4	Standard warranty + 18 months	Standard warranty extended with 18 months from end date of the standard warranty. Warranty terms and conditions apply. Contact Customer Service in case of other requirements.

Continues on next page

© Copyright 2009-2019 ABB. All rights reserved.

Option	Type	Description
438-5	Standard warranty + 24 months	Standard warranty extended with 24 months from end date of the standard warranty. Warranty terms and conditions apply. Contact Customer Service in case of other requirements.
438-6	Standard warranty + 6 months	Standard warranty extended with 6 months from end date of the standard warranty. Warranty terms and conditions apply.
438-7	Standard warranty + 30 months	Standard warranty extended with 30 months from end date of the standard warranty. Warranty terms and conditions apply.
438-8	Stock warranty	Maximum 6 months postponed start of standard warranty, starting from factory shipment date. Note that no claims will be accepted for warranties that occurred before the end of stock warranty. Standard warranty commences automatically after 6 months from *Factory Shipment Date* or from activation date of standard warranty in WebConfig. **Note** Special conditions are applicable, see *Robotics Warranty Directives*.

© Copyright 2009-2019 ABB. All rights reserved.

2.3 Floor cables

Manipulator cable length

Option	Lengths
210-2	7 m
210-3	15 m
210-4	22 m
210-5	30 m

Application interface Connection to

Option	Name	Description
16-1	Cabinet	The signals are connected to 12-pole screw terminals, Phoenix MSTB 2.5/12-ST-5.08, to the Control Module.

Connection of Parallel/CAN DeviceNet communication

Following information specifies the cable length for Parallel/CAN DeviceNet/Ether-net + PROFIBUS floor cables for connections between cabinets and manipulator.

Option	Lengths
94-1/90-2/859-1/92-2	7m
94-2/90-3/859-2/92-3	15m
90-4/859-3/92-4	22m
94-4/90-5/859-4/92-5	30m

© Copyright 2009-2019 ABB. All rights reserved.

2.4 Process

Process module

Option	Type	Description
768-1	Empty cabinet small	See *Product specification - Controller IRC5 with FlexPendant*, list of variants
768-2	Empty cabinet large	See *Product specification - Controller IRC5 with FlexPendant*, list of variants

WeldGuide III

Option	Type	Description
958-1	Basic	Only together with ArsitoMig 4000i/5000i, MigRob and TPS power sources. Digital I/O or AD Combi I/O is needed for WeldGuide functions. Requires option WeldGuide MultiPass [815-2].
958-2	Advanced	Only together with ArsitoMig 4000i/5000i, MigRob and TPS power sources. Digital I/O or AD Combi I/O is needed for WeldGuide functions. Requires option WeldGuide MultiPass [815-2].

Installation kit

Option	Type	Description
715-1	Installation kit	See *Product specification - Controller IRC5 with FlexPendant*, list of variants

Torch service

Option	Type	Description
1037-1	ABB TSC	ABB Torch Service Center
1037-2	ABB TC96	ABB Torch Cleaner
1037-5	BullsEye	BullsEye stand alone

Torch service options

Option	Type	Description
1038-1	Extension pedestal	Extension pedestal for TSC/TC/BullsEye

© Copyright 2009-2019 ABB. All rights reserved.

2.5 User documentation

User documentation

The user documentation describes the robot in detail, including service and safety instructions.

All documents can be found via myABB Business Portal, *www.myportal.abb.com*.

© Copyright 2009-2019 ABB. All rights reserved.

This page is intentionally left blank

3 Accessories

3.1 Introduction to accessories

General

There is a range of tools and equipment available, especially designed for the manipulator.

Basic software and software options for robot and PC

For more information, see *Product specification - Controller IRC5 with FlexPendant* and *Product specification - Controller software IRC5*.

Robot peripherals

- Track Motion
- Motor Units
- Positioners

© Copyright 2009-2019 ABB. All rights reserved.

This page is intentionally left blank

Index

A
Absolute Accuracy, 30
  MultiMove, 31
Absolute Accuracy, calibration, 28
accessories, 73

C
calibration
  Absolute Accuracy type, 27
  standard type, 26
calibration, Absolute Accuracy, 28
Calibration Pendulum, 29
CalibWare, 27
category 0 stop, 58
category 1 stop, 58
compensation parameters, 30

D
documentation, 71

E
Electronic Position Switches, 66
EPS, 66

F
fine calibration, 29

I
instructions, 71

M
manuals, 71

O
options, 63

P
product standards, 19

S
safety standards, 19
service instructions, 71
standards, 19
  ANSI, 20
  CAN, 20
  EN, 19
  EN IEC, 19
  EN ISO, 19
standard warranty, 67
stock warranty, 67
stopping distances, 58
stopping times, 58

U
user documentation, 71

V
variants, 63

W
warranty, 67

© Copyright 2009-2019 ABB. All rights reserved.

ABB AB, Robotics
Robotics and Motion
S-721 68 VÄSTERÅS, Sweden
Telephone +46 (0) 21 344 400

ABB AS, Robotics
Robotics and Motion
Nordlysvegen 7, N-4340 BRYNE, Norway
Box 265, N-4349 BRYNE, Norway
Telephone: +47 22 87 2000

ABB Engineering (Shanghai) Ltd.
Robotics and Motion
No. 4528 Kangxin Highway
PuDong District
SHANGHAI 201319, China
Telephone: +86 21 6105 6666

ABB Inc.
Robotics and Motion
1250 Brown Road
Auburn Hills, MI 48326
USA
Telephone: +1 248 391 9000

abb.com/robotics

3HAC032885-001, Rev Z, en

© Copyright 2009-2019 ABB. All rights reserved.
Specifications subject to change without notice.